THIS DRAWING IS UNPUBLISHED. RELEASED FOR PUBLICATION -,- .
© COPYRIGHT - By - ALL RIGHTS RESERVED.

LOC	DIST
AF	50

REVISIONS

P	LTR	DESCRIPTION	DATE	DWN	APVD
	D1	REVISED PER ECO-11-004917	11MAR11	RK	HMR

1. CONTINUOUS STRIP ON REELS.
2. MATING TAB THK TO BE .032±.001.
3. WIRE SIZE IS #20-#16 AWG.
4. INSULATION RANGE TO BE .120-.140 DIA.

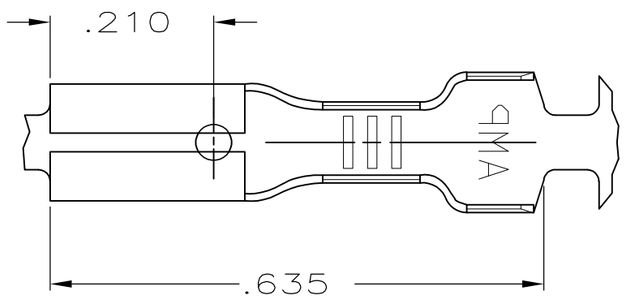

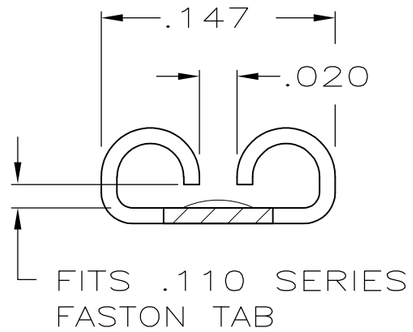

VIEW A-A

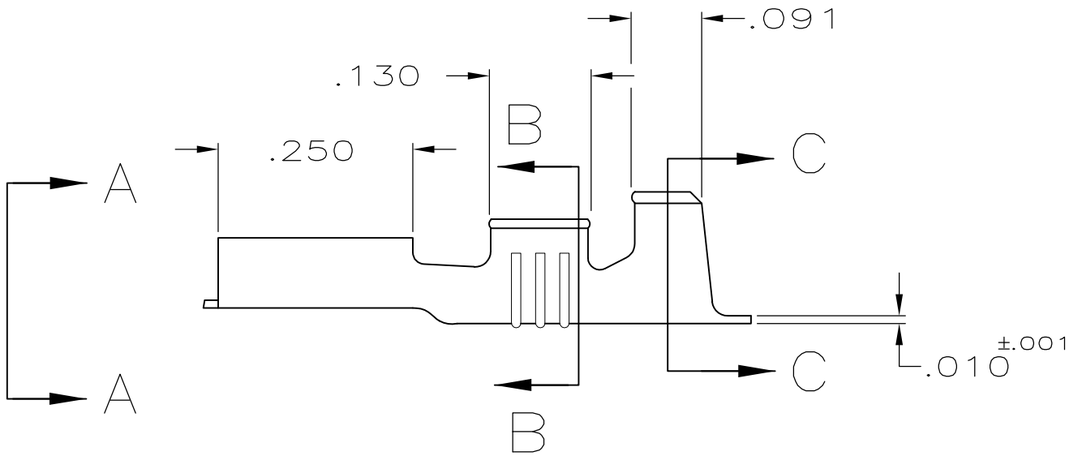

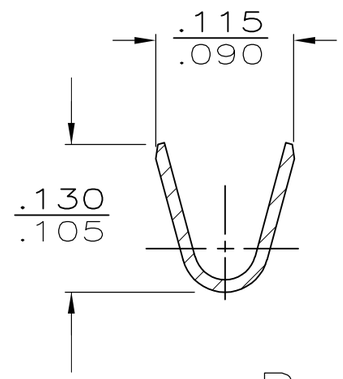

SECTION B-B

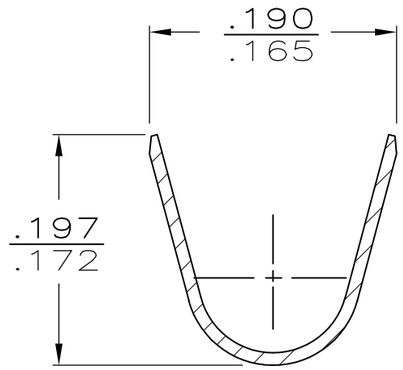

SECTION C-C

FINISH	MATERIAL	PART NO
.000150 MIN NICKEL	082 STEEL	62050-2
PRE-TIN	H04 BRASS	62050-1

F	.155	.188	F	.070	.060	16
					.051	18
					.045	20
TYPE	WIDTH	STRIP LENGTH ±.015	TYPE	WIDTH	±.002 HEIGHT	WIRE
INSUL BARREL CRIMP		WIRE BARREL CRIMP				

THIS DRAWING IS A CONTROLLED DOCUMENT.

DIMENSIONS: INCHES

TOLERANCES UNLESS OTHERWISE SPECIFIED:
0 PLC ± -
1 PLC ± -
2 PLC ± -
3 PLC ± .015
4 PLC ± -
ANGLES ± -

MATERIAL: SEE TABLE
FINISH: SEE TABLE

DWN	JR RUTH	5/15/89
CHK	M FEHER	5/15/89
APVD	C MEYERS	5/15/89
PRODUCT SPEC	—	
APPLICATION SPEC	114-2036	
WEIGHT	—	

TE Connectivity

NAME: RECEPTACLE, FASTON,™ .110 SERIES

SIZE	CAGE CODE	DRAWING NO	RESTRICTED TO
A3	00779	C-62050	—

CUSTOMER DRAWING | SCALE NTS | SHEET 1 OF 1 | REV D1

1470-19 (3/11)