Inductive
Cylinder Position Sensors

Housing Style	Part Number	ID Number	Features	Sensing Range (mm)	Output
CRS - *microfast*® Connector 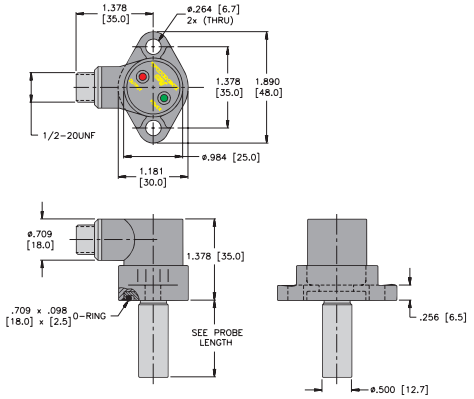	Bi 2-CRS232-ADZ30X2-B3131/S34	T4275093	WFI	2	2-Wire AC/DC
	Bi 2-CRS260-ADZ30X2-B3131/S34	T4275493	WFI	2	
	Bi 2-CRS287-ADZ30X2-B3131/S34	T4275893	WFI	2	
	Bi 2-CRS317-ADZ30X2-B3131/S34	T4276293	WFI	2	
	Bi 2-CRS343-ADZ30X2-B3131/S34	T4276493	WFI	2	
	Bi 2-CRS476-ADZ30X2-B3131/S34	T4276693	WFI	2	
	Bi 2-CRS524-ADZ30X2-B3131/S34	T4277093	WFI	2	
	Bi 2-CRS603-ADZ30X2-B3131/S34	T4277493	WFI	2	
	Bi 2-CRS705-ADZ30X2-B3131/S34	T4277893	WFI	2	
	Bi 2-CRS730-ADZ30X2-B3131/S34	T4278293	WFI	2	
	Bi 2-CRS959-ADZ30X2-B3131/S34	T4279093	WFI	2	
	Bi 2-CRS1159-ADZ30X2-B3131/S34	T4279493	WFI	2	
CRS - *minifast*® Connector 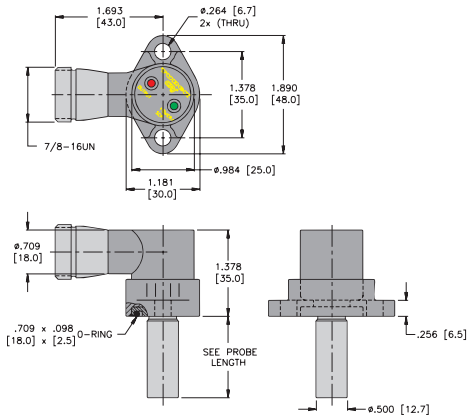	Bi 2-CRS232-ADZ30X2-B1131/S34	T4270093	WFI	2	2-Wire AC/DC
	Bi 2-CRS260-ADZ30X2-B1131/S34	T4270493	WFI	2	
	Bi 2-CRS287-ADZ30X2-B1131/S34	T4270893	WFI	2	
	Bi 2-CRS317-ADZ30X2-B1131/S34	T4271293	WFI	2	
	Bi 2-CRS343-ADZ30X2-B1131/S34	T4271493	WFI	2	
	Bi 2-CRS476-ADZ30X2-B1131/S34	T4271693	WFI	2	
	Bi 2-CRS524-ADZ30X2-B1131/S34	T4272093	WFI	2	
	Bi 2-CRS603-ADZ30X2-B1131/S34	T4272493	WFI	2	
	Bi 2-CRS705-ADZ30X2-B1131/S34	T4272893	WFI	2	
	Bi 2-CRS730-ADZ30X2-B1131/S34	T4273293	WFI	2	
	Bi 2-CRS959-ADZ30X2-B1131/S34	T4274093	WFI	2	
	Bi 2-CRS1159-ADZ30X2-B1131/S34	T4274493	WFI	2	

Bi 2-CRS-XXXX-.. = Length of probe in mm.

Voltage	Switching Freq. (Hz)	Operating Current (mA) VAC/VDC	Operating Temp. (°C)	Protection	Housing	Probe	Power LED	Output LED	Mating Cord, Cable Length/Jacket	Wiring Diagram #
20-250 VAC/DC	30	≤400/300	-25 to +70	IP 67	Zinc	CPB	CN	Rd	KB 3T-*	1
	30	≤400/300	-25 to +70	IP 67	Zinc	CPB	CN	Rd	KB 3T-*	1
	30	≤400/300	-25 to +70	IP 67	Zinc	CPB	CN	Rd	KB 3T-*	1
	30	≤400/300	-25 to +70	IP 67	Zinc	CPB	CN	Rd	KB 3T-*	1
	30	≤400/300	-25 to +70	IP 67	Zinc	CPB	CN	Rd	KB 3T-*	1
	30	≤400/300	-25 to +70	IP 67	Zinc	CPB	CN	Rd	KB 3T-*	1
	30	≤400/300	-25 to +70	IP 67	Zinc	CPB	CN	Rd	KB 3T-*	1
	30	≤400/300	-25 to +70	IP 67	Zinc	CPB	CN	Rd	KB 3T-*	1
	30	≤400/300	-25 to +70	IP 67	Zinc	CPB	CN	Rd	KB 3T-*	1
	30	≤400/300	-25 to +70	IP 67	Zinc	CPB	CN	Rd	KB 3T-*	1
	30	≤400/300	-25 to +70	IP 67	Zinc	CPB	CN	Rd	KB 3T-*	1
	30	≤400/300	-25 to +70	IP 67	Zinc	CPB	CN	Rd	KB 3T-*	1
20-250 VAC/DC	30	≤400/300	-25 to +70	IP 67	Zinc	CPB	CN	Rd	RKM 311-*M	2
	30	≤400/300	-25 to +70	IP 67	Zinc	CPB	CN	Rd	RKM 311-*M	2
	30	≤400/300	-25 to +70	IP 67	Zinc	CPB	CN	Rd	RKM 311-*M	2
	30	≤400/300	-25 to +70	IP 67	Zinc	CPB	CN	Rd	RKM 311-*M	2
	30	≤400/300	-25 to +70	IP 67	Zinc	CPB	CN	Rd	RKM 311-*M	2
	30	≤400/300	-25 to +70	IP 67	Zinc	CPB	CN	Rd	RKM 311-*M	2
	30	≤400/300	-25 to +70	IP 67	Zinc	CPB	CN	Rd	RKM 311-*M	2
	30	≤400/300	-25 to +70	IP 67	Zinc	CPB	CN	Rd	RKM 311-*M	2
	30	≤400/300	-25 to +70	IP 67	Zinc	CPB	CN	Rd	RKM 311-*M	2
	30	≤400/300	-25 to +70	IP 67	Zinc	CPB	CN	Rd	RKM 311-*M	2
	30	≤400/300	-25 to +70	IP 67	Zinc	CPB	CN	Rd	RKM 311-*M	2
	30	≤400/300	-25 to +70	IP 67	Zinc	CPB	CN	Rd	RKM 311-*M	2

Wiring Diagrams

Diagram 1

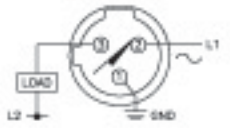

Diagram 2

* Length in meters.

WIRING DIAGRAM

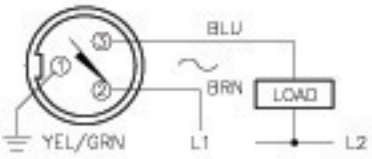

SHORT-CIRCUIT AND OVERLOAD PROTECTED

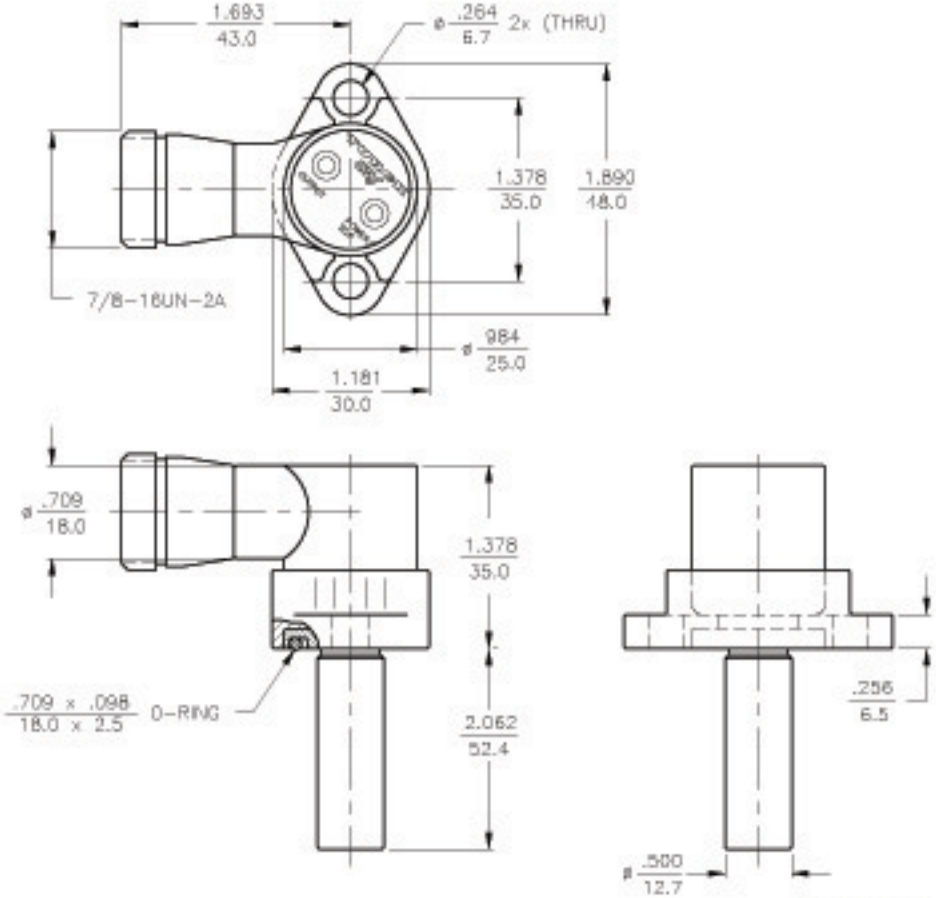

SPECIFICATIONS

OPERATING VOLTAGE	20–250 VAC/DC
LINE FREQUENCY	40–60 Hz
HYSTERESIS (DIFFERENTIAL TRAVEL)	3–15% (5% TYPICAL)
VOLTAGE DROP ACROSS CONDUCTING SENSOR	≤ 6.0 V at 400 mA
OUTPUT FUNCTION	NORMALLY OPEN 2-WIRE AC/DC SELF-CONTAINED
SHORT-CIRCUIT PROTECTED	YES
TRIGGER CURRENT FOR OVERLOAD PROTECTION	≥500 mA
CONTINUOUS LOAD CURRENT	≤ 400 mA
LEAKAGE (OFF-STATE) CURRENT	≤ 1.7 mA
MINIMUM LOAD CURRENT	≥ 3.0 mA
INRUSH CURRENT	20–140 VAC 2.4 A 140–250 VAC 20–250 VDC
POWER-ON EFFECT PROTECTION	INCORPORATED
PROTECTION AGAINST TRANSIENTS	<20 kV <1 ms <0.5 J
OPERATING TEMPERATURE	−25°C to +70°C (−13°F to +158°F)
ENCLOSURE	MEETS NEMA 1, 3, 4, 6, 13 AND IEC IP67
SHOCK	30 g, 11 ms
VIBRATION	10 Hz to 55 Hz, 1 mm AMPLITUDE (IN ALL 3 PLANES)
LED FUNCTION	GREEN: POWER ON GREEN FLASHING: SHORT-CIRCUIT OR OVERLOAD PROTECTION RED: OUTPUT ENERGIZED
SENSING RANGE	2 mm = .079" (NOMINAL)
SWITCHING FREQUENCY	30 Hz
REPEATABILITY	———
OPERATING PRESSURE	1500 PSI (MAX. APPLIED 3000 PSI)
SHIELDED	YES
RESPONSE TIME	15 ms MAX.
COLOR CODE	RED
AGENCY COMPLIANCES	E86R1 UL: E118717(N) 11/15/88 CSA: LR 57940 4/18/92

NOTES:

1 "/S34" DESIGNATES WELD FIELD IMMUNITY. SENSOR IS SUITABLE FOR USE ON RESISTANCE WELDING MACHINES.

2. ROTATION CAPABILTY OF THE CRS SWITCH IS 360°.

REV	DESCRIPTION	BY	DATE	ECO NO.
X	UPDATE TO CURRENT TITLE BLOCK	RDS	01/21/03	10154

RELATED DOCUMENTS
1.
2.
3.
4.

3RD ANGLE PROJECTION

THIS DRAWING IS PROPERTY OF TURCK INC. USE OF THIS DOCUMENT WITHOUT WRITTEN PERMISSION IS PROHIBITED.

TURCK INC
High Technology Sensors and Automation Controls

MATERIAL

FINISH: BLACK ZINC

TOLERANCES UNLESS OTHERWISE SPECIFIED
.X ±0.02
.XX ±0.01
.XXX ±0.005
ANGLES ±1°
ALL MILLIMETER DIMENSIONS ARE REFERENCE ONLY

DRFT: SMW
DATE: 12/10/86
DSGN:
SCALE: NONE

UNIT OF MEASUREMENT
INCH [MILLIMETER]
DO NOT SCALE THIS DRAWING

DESCRIPTION: BI 2-CRS524-ADZ30X2-B1131 /S34 UL

IDENTIFICATION NO.: T4272093
REV: X

FILE: T4272093
SHEET 1 OF 1