DRAWING FOR REFERENCE: This is subject to change without notice
08/11/2012

HRS DRAWING FOR REFERENCE

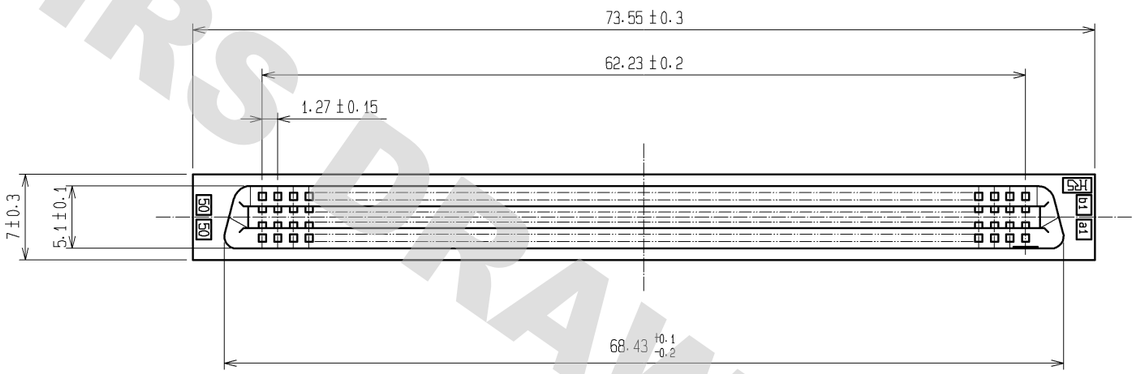

RECOMMENDED PC BOARD HOLE PATTERN (MOUNTING SIDE)
(FREE)t=1.6

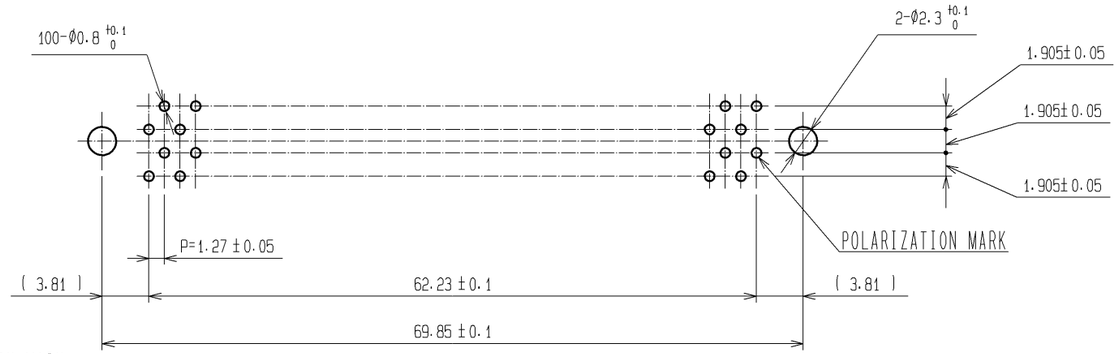

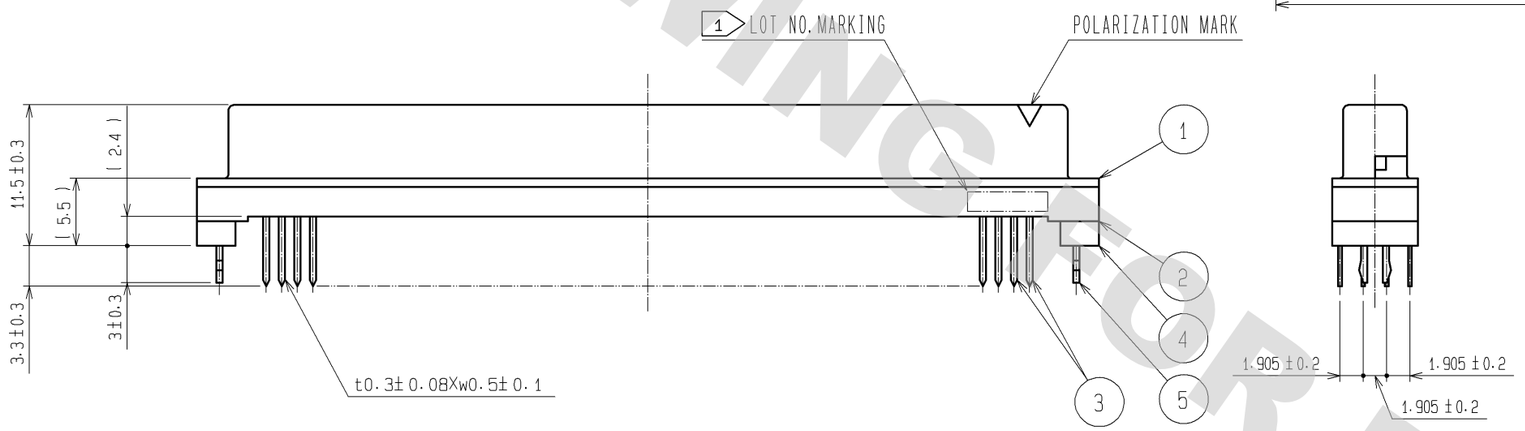

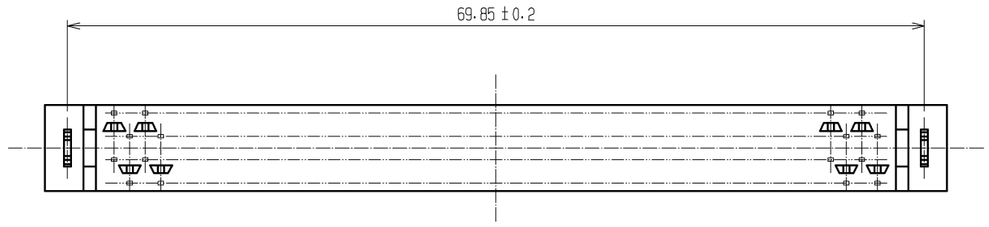

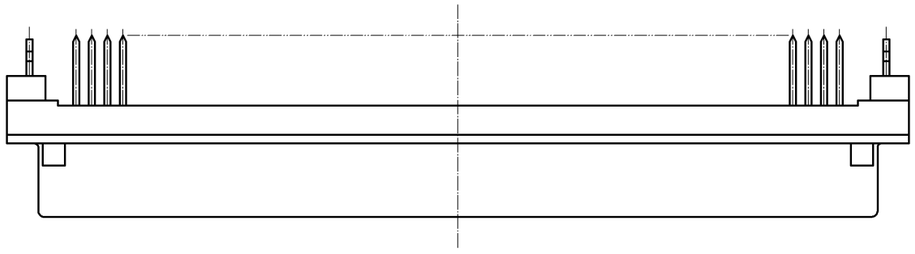

NOTES 1 LOT NO. MARKING SIDE SHALL BE OPTIONAL.
2. THE DIMENSIONS IN PARENTHESES ARE FOR REFERENCE.

NO.	MATERIAL	FINISH , REMARKS
5	PHOSPHOR BRONZE	TIN-PLATING
1,2,4	POLYAMIDE	BLACK , UL94V-0

NO.	MATERIAL	FINISH , REMARKS
3	PHOSPHOR BRONZE	CONTACT AREA : GOLD 0.2μm min. DIP AREA : TIN-PLATING 2μm min. UNDER PLATING : NICKEL 2μm min.

UNITS	SCALE	COUNT	DESCRIPTION OF REVISIONS	DESIGNED	CHECKED	DATE
mm	2 : 1					

HRS HIROSE ELECTRIC CO., LTD.

APPROVED	: HS. OZAWA	08. 01. 15
CHECED	: HS. OZAWA	08. 01. 15
DESIGNED	: SY. KAMIGA	08. 01. 15
DRAWN	: HK. SUNADORI	08. 01. 11

DRAWING NO.	EDC3-083274-21
PART NO.	FX2CA2-100S-1.27DSAL(71)
CODE NO.	CL572-2578-6-71

1/1

FORM HC0011-5-7