Product datasheet
Characteristics

XB7EVM3LC
round pilot light Ø 22 - green - integral LED - 220 V AC - screw clamp terminals

Main

Range of product	Harmony XB7
Device short name	XB7
Mounting diameter	22 mm
Sale per indivisible quantity	1
Shape of signaling unit head	Round
Cap/Operator or lens colour	Green
Light source	LED
Bulb base	Integral LED
[Us] rated supply voltage	220 V AC, 50/60 Hz
Device presentation	Monolithic product

Complementary

Height	29 mm
Width	29 mm
Depth	53 mm
Terminals description ISO n°1	(X1-X2)PL
Product weight	0.017 kg
Device mounting	Fixing hole: Ø 22.5 mm (22.3 +0.4/0) conforming to EN/IEC 60947-5-1
Fixing center	>= 30 x 40 mm on support panel, metal, thickness: 1...6 mm >= 30 x 40 mm on support panel, plastic, thickness: 2...6 mm
Fixing mode	Fixing nut beneath head recommended torque: 0.8...1.6 N.m
Marking	CCC
Connections - terminals	Screw clamp terminals : <= 2 x 1.5 mm² with cable end conforming to EN/IEC 60947-1 Screw clamp terminals : 1 x 0.5...1 x 2.5 mm² without cable end conforming to EN/IEC 60947-1
Tightening torque	0.8...1.2 N.m conforming to EN 60947-1
Shape of screw head	Cross head compatible with JIS No 1 screwdriver Cross head compatible with Philips no 1 screwdriver Cross head compatible with pozidriv No 1 screwdriver Slotted head compatible with flat Ø 4 mm screwdriver Slotted head compatible with flat Ø 5.5 mm screwdriver
[Ui] rated insulation voltage	250 V (degree of pollution: 3) conforming to EN/IEC 60947-1
[Uimp] rated impulse withstand voltage	6 kV conforming to EN/IEC 60947-1
Signalling type	Steady

Disclaimer: This documentation is not intended as a substitute for and is not to be used for determining suitability or reliability of these products for specific user applications

Supply voltage limits	0.8...1.1 V AC
Current consumption	16...20 mA
Service life	50000 h at rated voltage and 25 °C

Environment

Protective treatment	TC
Ambient air temperature for storage	-40...80 °C
Ambient air temperature for operation	-25...70 °C
Overvoltage category	Class I conforming to IEC 536
IP degree of protection	IP40 (front face) conforming to IEC 60529 IP20 (rear face) conforming to IEC 60529
Standards	IEC 60947-1 IEC 60947-5-1 GB 14048.5 GB 14048.1
Product certifications	CCC
Vibration resistance	5 gn (f = 2...500 Hz) conforming to IEC 60068-2-6
Shock resistance	30 gn (duration = 18 ms) for half sine wave acceleration conforming to IEC 60068-2-27 50 gn (duration = 11 ms) for half sine wave acceleration conforming to IEC 60068-2-27
Electromagnetic compatibility	Disturbing field emission, class B conforming to EN 55011

Offer Sustainability

RoHS (date code: YYWW)	Compliant - since 1001 - Schneider Electric declaration of conformity Schneider Electric declaration of conformity

XB7EVM3LC

Dimensions

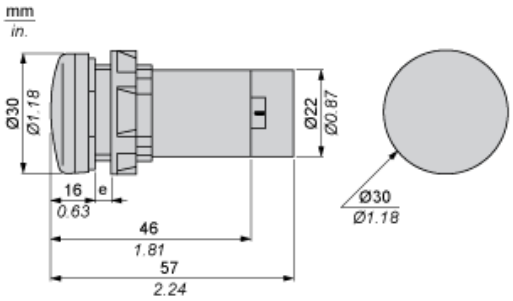

e Support panel thickness: 1 to 6 mm/0.4 to 0.24 in. (metal), 2 to 6 mm/0.8 to 0.24 in. (plastic).

XB7EVM3LC

Mounting

Diameter of Finished Fixing Holes

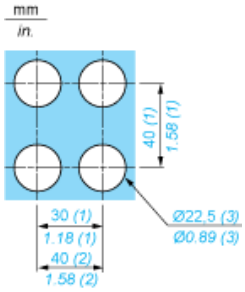

(1) Minimum value.
(2) 40 mm/1.58 in. for Emergency switching off pushbutton only.
(3) Standard value: Ø 22.3 (0; + 0.4) mm/Ø 0.88 (0; + 0.02) in.

XB7EVM3LC

Faston Clip Connection

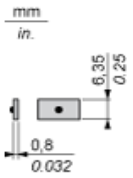

XB7EVM3LC

“U” Type Tag Connection

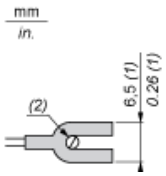

(1) 6.5 mm/0.26 in. recommended, 7 mm/0.28 in. max.
(2) M3 screw clamp terminal.

Wiring Diagram

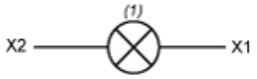

(1) LED