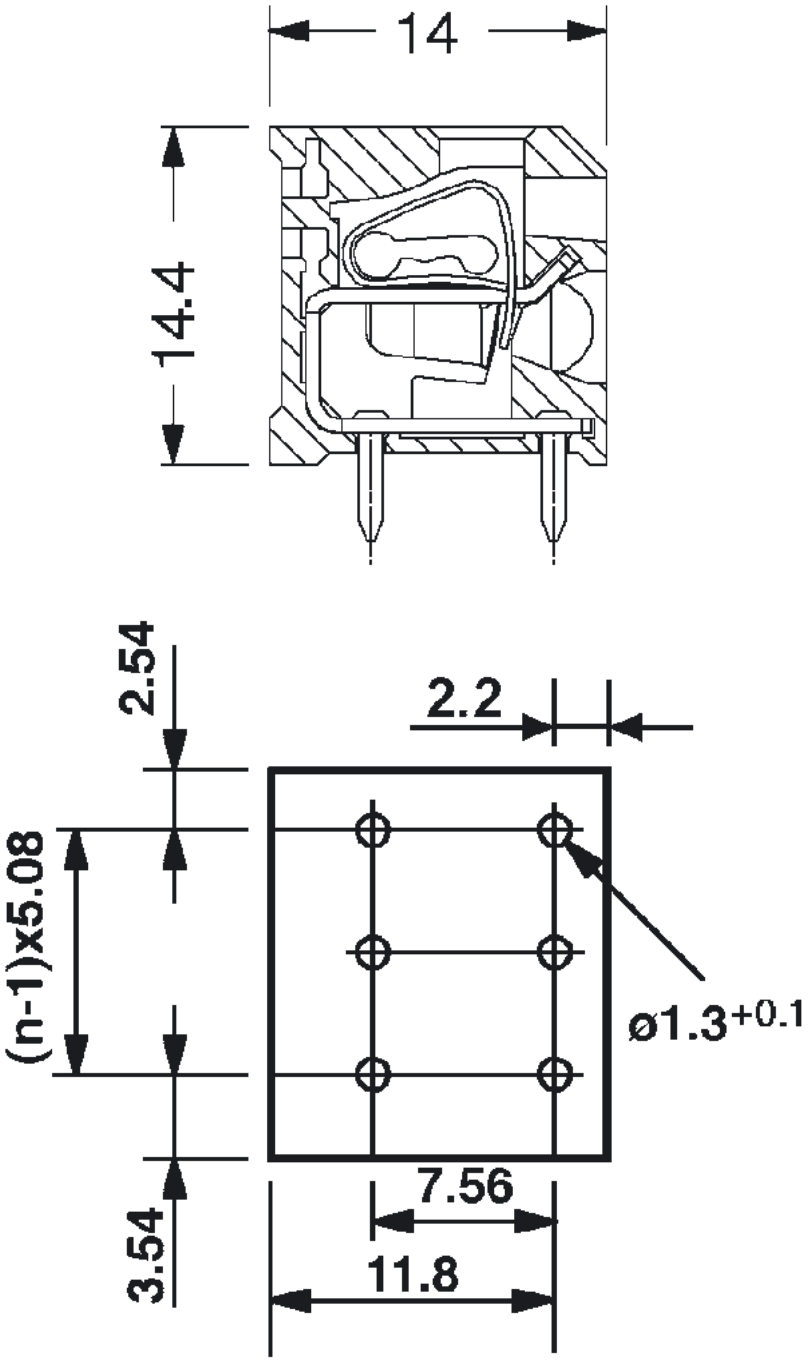
14
14.4
2.54
2.2
(n-1)x5.08
ø1.3+0.1
7.56
3.54
11.8