DRAWING FOR REFERENCE: This is subject to change without notice
05/31/2013

HRS DRAWING FOR REFERENCE

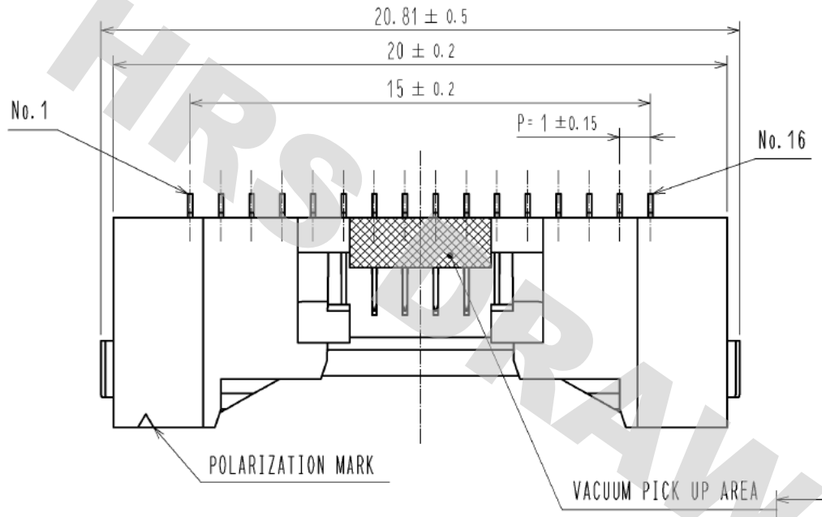

RECOMMENDED PCB LAYOUT
(MOUNTING SURFACE SIDE) (FREE)

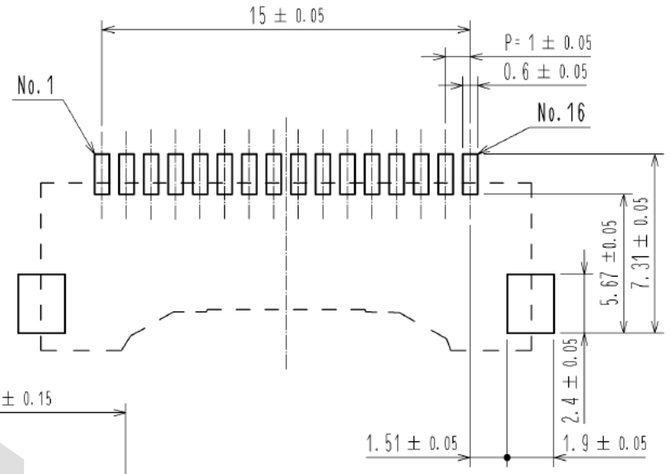

RECOMMENDED METAL MASK (FREE)
THICKNESS : 0.1mm
OPEN AREA RATIO:100%

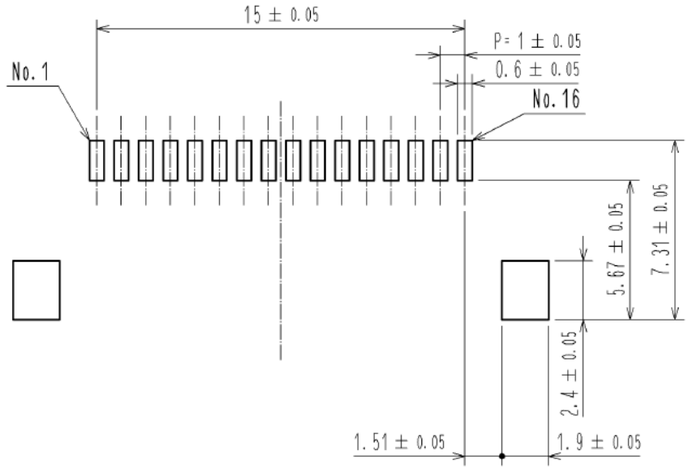

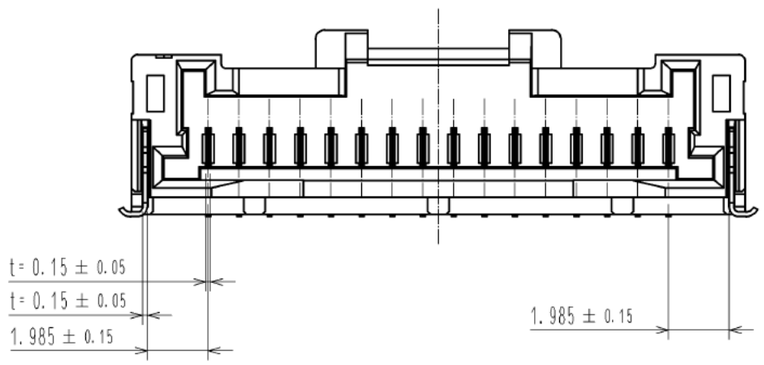

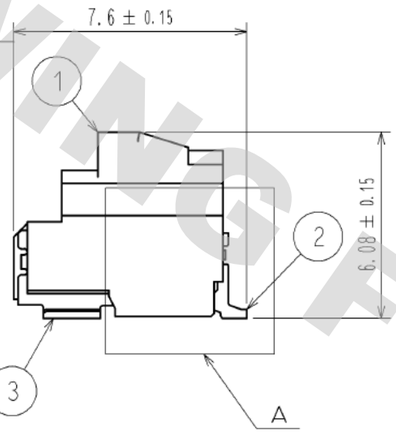

MATING FIGURE(5:1)

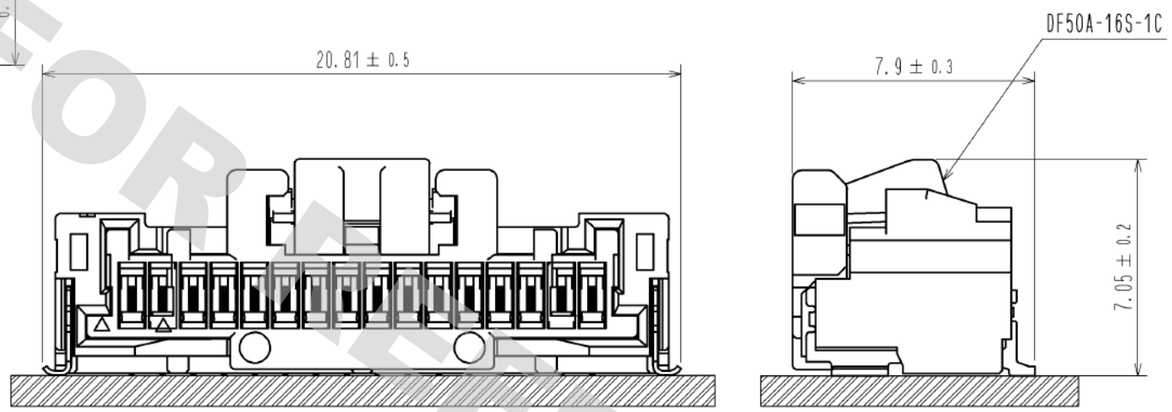

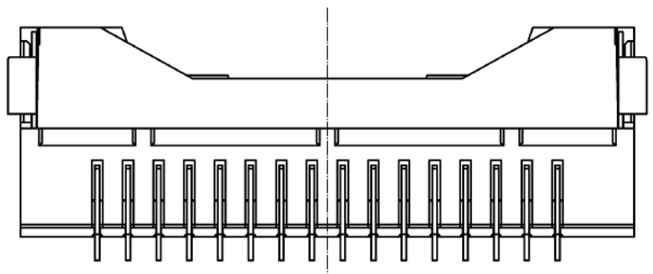

A(10:1)

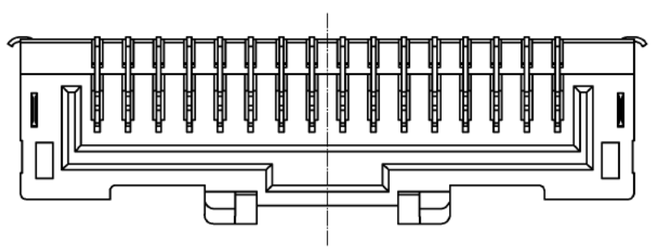

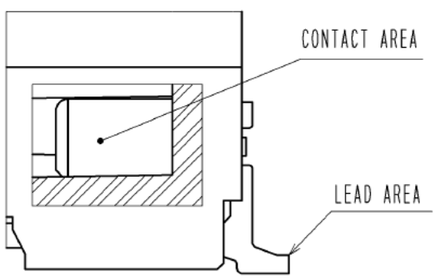

NOTES 1. LEAD CO-PLANARITY SHALL BE 0.1mm MAX
2. PLEASE CONSULT HIROSE WHEN THE PRODUCT IS MONUTED TO FPC.

NO.	MATERIAL	FINISH , REMARKS
3	BRASS	CONTACT AREA : Sn PLATING 1μm MIN UNDER PLATING : Cu PLATING 0.3μm MIN
2	BRASS	CONTACT AREA : Au PLATING 0.05μm MIN LEAD AREA : Au PLATING 0.05μm MIN UNDER PLATING : Ni PLATING 1μm MIN
1	LCP	BLACK , UL94V-0

NO.	MATERIAL	FINISH , REMARKS
6	PS	REEL , BLACK
5	POLYESTER	CLEAR
4	PS	CLEAR
		CLEAR

UNITS	SCALE	COUNT	DESCRIPTION OF REVISIONS	DESIGNED	CHECKED	DATE
mm	5 : 1					

HRS HIROSE ELECTRIC CO., LTD.

APPROVED	KI. AKIYAMA	12.07.02
CHECED	HK. UMEHARA	12.07.02
DESIGNED	ST. SATO	12.06.29
DRAWN	MI. SAKIMURA	12.06.28

DRAWING NO.	EDC3-337118-01
PART NO.	DF50A-16P-1H(51)
CODE NO.	CL665-1045-9-51

1/2

DRAWING FOR REFERENCE: This is subject to change without notice
05/31/2013

HRS DRAWING FOR REFERENCE

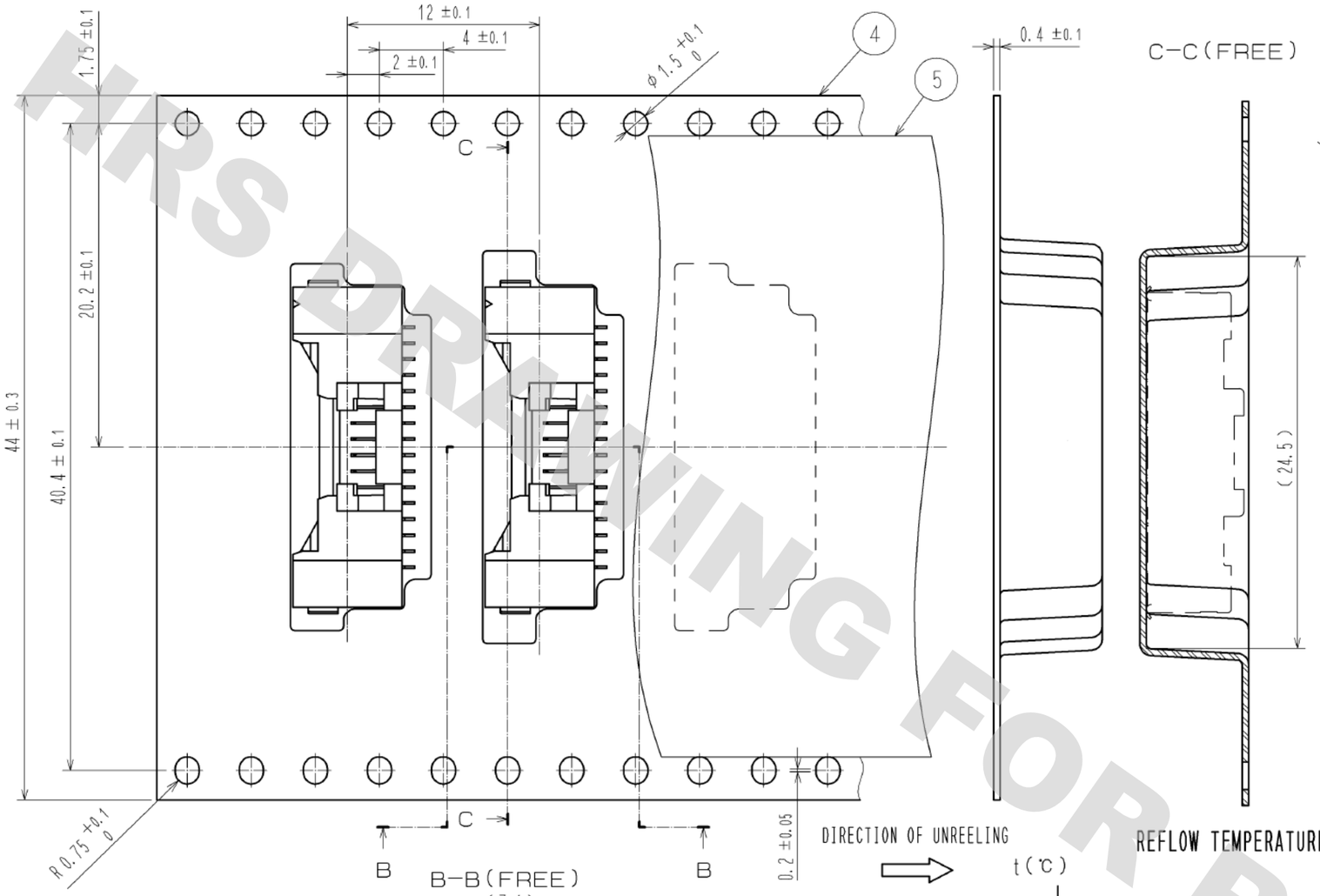

STYLE AND DIMENSION OF REEL (FREE)

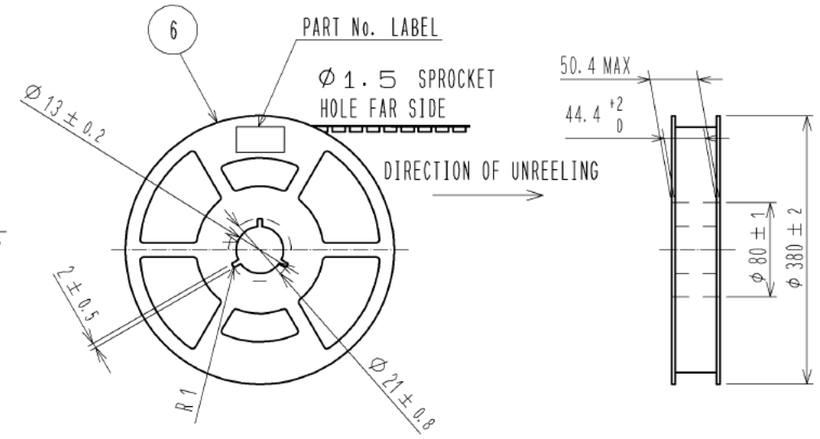

DETAIL OF PART No. LABEL

生産月日	年　月　日
図　番	CL665-1045-9-51
品　名	DF50A-16P-1H(51)
納入数量	1000 KO
納入者	ヒロセ電機(株)

SUPPLIER
QUANTITY
PART No.
CODE No.
DATE OF MANUFACTURED

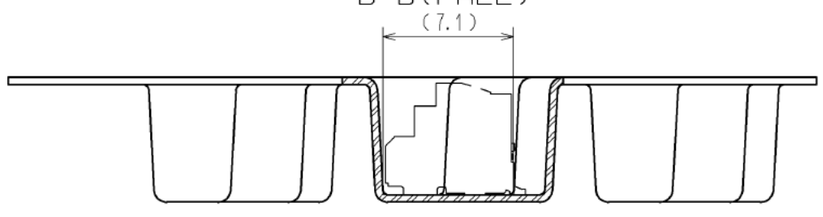

DIRECTION OF UNREELING

REFLOW TEMPERATURE PROFILE USING LEAD-FREE SOLDER PASTE (REFERENCE)

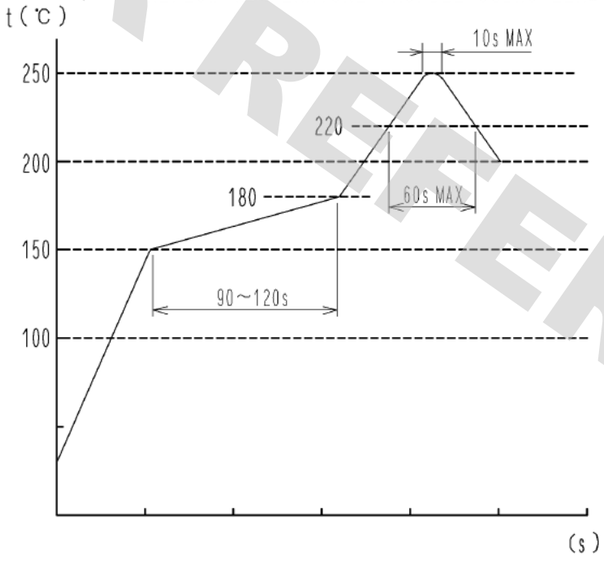

NUMBER OF REFLOW CYCLES 2 CYCLES MAX.
THE TEMPERATURE IS MEASURED IN THE TERMINAL LEAD PART.

ADDITIONAL FACTORS, SUCH AS SOLDER PASTE TYPE, PCB SIZE AND OTHER MOUNTED COMPONENTS COULD AFFECT THE PROFILE. THEREFORE, A THOROUGH EVALUATION OF MOUNTING CONDITION IS REQUIRED PRIOR TO PRODUCTION. TEMPERATURE IS MEASURED AT CONTACT LEAD.

5 TAPING(FREE)

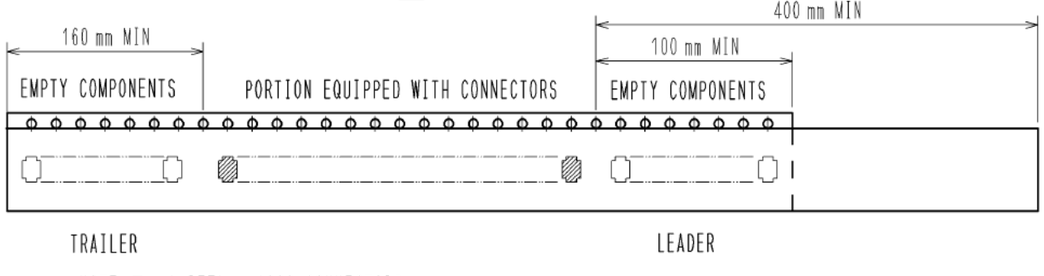

NOTE 3. 1 REEL : 1000 CONNECTORS
4 REEL TO JIS C 0806.(PACKAGING OF COMPONENTS FOR AUTOMATIC HANDLING)
5. THE DIMENSIONS IN PARENTHESES ARE FOR REFERENCE.

HRS	
DRAWING NO.	EDC3-337118-01
PART NO.	DF50A-16P-1H(51)
CODE NO.	CL665-1045-9-51
	2/2