Product Data Sheet | 4114 NU

The engineer's choice

ebmpapst

4114 NU

INDEX

1 General 3

2 Mechanics 3

2.1 General 3
2.2 Connections 3

3 Operating Data 4

3.1 Operating Data - Electrical Interface - Input 4
3.2 Electrical Operating Data 5
3.3 Operating Data - Electrical Interface -Output 5
3.4 Electrical Features 6
3.5 Aerodynamic 7
3.6 Sound Data 8

4 Environment 8

4.1 General 8
4.2 Climatic requirements*) 9

5 Safety 10

5.1 Electrical Safety 10
5.2 Approval Tests 10

6 Reliability 10

6.1 General 10

1 General

Fan type	Fan	
Rotational direction looking at rotor	clockwise	
Airflow direction	Air intake over struts	
Bearing system	Ball bearing	
Mounting position	any	

2 Mechanics

2.1 General

Width	119 mm	
Height	119 mm	
Depth	38 mm	
Weight	0,400 kg	
Housing material	Metal	
Impeller material	Plastic	
Max. torque when mounted across both mounting flanges Screw size	wire outlet corner: 450 Ncm remaining corners: 600 Ncm ISO 4762 - M4 degreased, without an additional brace and without washer	

2.2 Connections

Electrical connection	Wires	
Length of lead wire Tolerance	310 mm +- 10 mm	
Wire gauge (AWG)	22	
Insulation diameter	1,70 mm	

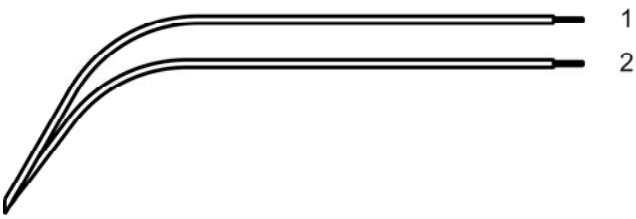

	Colour	Operation
Wire 1	red	+ UB
Wire 2	blue	- GND

3 Operating Data

3.1 Operating Data - Electrical Interface - Input

Control input	None

3.2 Electrical Operating Data

Measurement conditions: Normal air density = 1,2 kg/m3; Temperature 23°C +/- 3°C; Motor axis horizontal;warm-up time before measuring 5 minutes (unless otherwise specified).In the intake and outlet area should not be any solid obstruction within 0,5 m.

$\Delta p = 0$: corresp. to free air flow (see section 3.5)
I: corresp. to arithm. mean current value

Features	Condition	Symbol	Values		
Voltage range	$\Delta p = 0$	U	12,0 V		29,0 V
Nominal voltage	$\Delta p = 0$	U_N		24,0 V	
Power consumption Tolerance	$\Delta p = 0$ 0001	P	1,3 W +- 17,5 %	5,6 W +- 12,5 %	8,7 W +- 15,0 %
Current consumption Tolerance	$\Delta p = 0$ 0001	I	108 mA +- 17,5 %	235 mA +- 12,5 %	300 mA +- 15,0 %
Speed Tolerance	$\Delta p = 0$ 0001	n	1.680 1/min +- 12,5 %	3.200 1/min +- 7,5 %	3.750 1/min +- 10,0 %
Starting current consumption				970 mA	

3.3 Operating Data - Electrical Interface -Output

Tacho type	None

Alarm type	None

3.4 Electrical Features

Electronic function	None	
Reversed polarity protection Max. residual current at Un	Rectifying diode IF <= 500 uA	
Locked rotor protection	Auto restart	
Locked rotor current at Un	approx. 970 mA	
Clock signal t3/t4 at locked rotor	Typical: 0,6 s / 10 s	

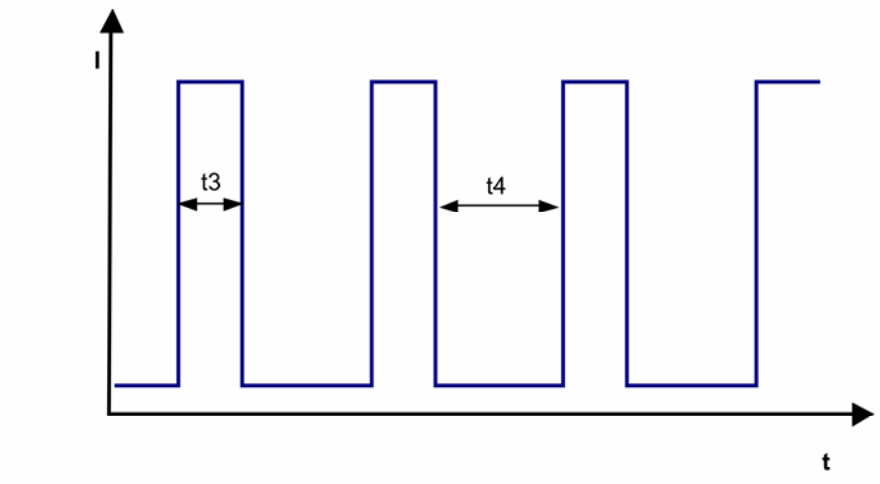

3.5 Aerodynamic

Measurement conditions:	Measured with a double chamber intake rig acc. to DIN EN ISO 5801. Normal air density = 1,2 kg/m3; Temperature 23°C +/- 3°C; In the intake and outlet area should not be any solid obstruction within 0,5 m.

a.) Operation condition:

3.200 1/min at free air flow

Max. free-air flow (Δp = 0 / $\dot{V}$ = max.)	168,0 m3/h	
Max. static pressure (Δp = max. / $\dot{V}$ =0)	100 Pa	

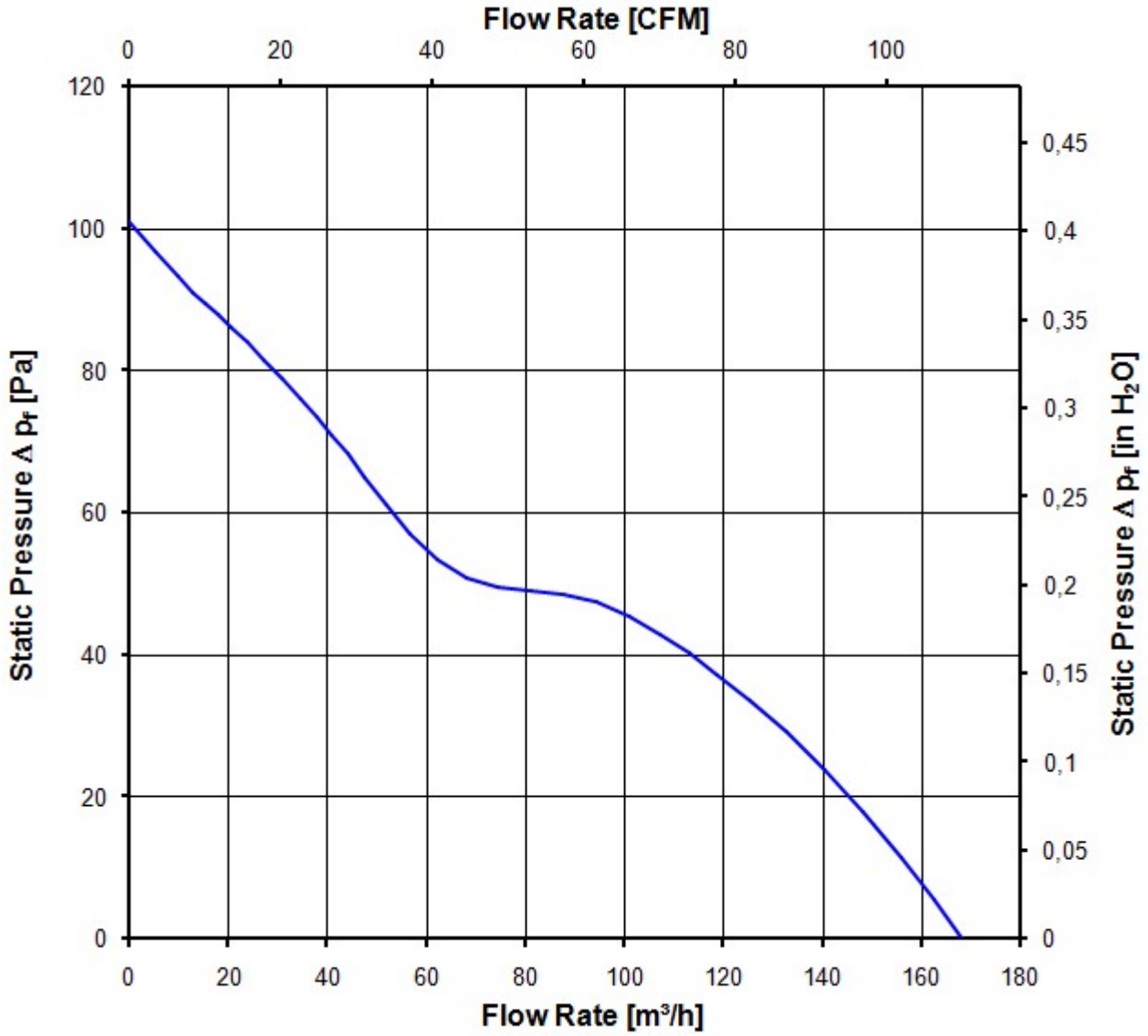

3.6 Sound Data

Measurement conditions:	Sound pressure level: 1 Meter distance between microphone and the air intake. Sound power level: Acc. to DIN 45635 part 38 (ISO 10302) Measured in a semianchoic chamber with a background noise level of Lp(A) < 5 dB(A) For further measurement conditions see section 3.5

a.) Operation condition:

3.200 1/min at free air flow

Optimal operating point	104,0 m3/h @ 40 Pa	
Sound power level at the optimal operating point	5,6 bel(A)	
Sound pressure level at free air flow, measured in rubber bands	49,0 dB(A)	

4 Environment

4.1 General

Min. permitted ambient temperature TU min.	-20 °C	
Max. permitted ambient temperature TU max.	75 °C	
Min. permitted storage temperature TL min.	-40 °C	
Max. permitted storage temperature TL max.	80 °C	

4.2 Climatic requirements*)

IP-protection type (certified)	IP 68 **)	
Humidity requirements	humid temperature, cyclic; according to DIN EN 60068-2-38, 10 cycle and condensation water check; according to DIN EN ISO 6270-2, 14 days	
Radiation exposure	Solar radiation; according to DIN EN 60068-2-5	
Salt fog requirements	None	
Harmful gas requirements	None	

*) Permittet application area:
The product is for the use in partial sheltered rooms or open, roofed areas. Direct exposure to water is allowed provided that this does not prevent the normal operation. Saline ambient conditions must be avoided.
Pollution degree 3 (according DIN EN 60664-1)
It occurs conductive pollution or dry non-conductive pollution which becomes conductive due to condensation.

**) The specification of the IP protection refers to the conditions mentioned in certification of the fan. The above mentioned short description of the protection scope is not final. For detailed information of the respective protection scope and definitions, see certification as well as DIN EN 60529 (protection by housings) and ISO 20653 (for vehicles) with the letter K.

Short description of the IP-protection type:
Solid particle Protection: Dust tight.
Protection against deliberate contact: Protected against contact to hazardous parts with a wire.
Protection against water: Protected against the effects of continuous immersion in water.

5 Safety

5.1 Electrical Safety

Dielectric strength DIN EN 60950 (VDE 0805) and DIN EN 60335 (VDE 0700) A.) Type test Measuring conditions: After 48h of storage at 95% R.H. and 25°C. No arcing or breakdown is allowed! All connections together to ground. B.) Routine test Measuring conditions: At indoor climate. No arcing or breakdown is allowed! All connections together to ground.	500 VAC / 1 Min. 500 VAC / 1 Sec.	
Isolation resistance Measuring conditions: After 48h of storage at 95% R.H. and 25°C measured with U=500 VDC for 1 min.	RI > 10 MOhm	
Air and leakage distances	1,0 mm / 1,2 mm	
Protection class	III	

5.2 Approval Tests

CE	Yes
UL	Yes / UL audited by CSA according to UL507, Electric Fans
VDE	Yes / Approval acc. to EN 60950 (VDE 0805) - Information technology equipment
CSA	Yes / C22.2 No. 113 Fans and Ventilators
CCC	No

The approval tests are observed to:
Maximal permitted operating voltage (see section 3.1) and max. permitted ambient temperature TU max.

6 Reliability

6.1 General

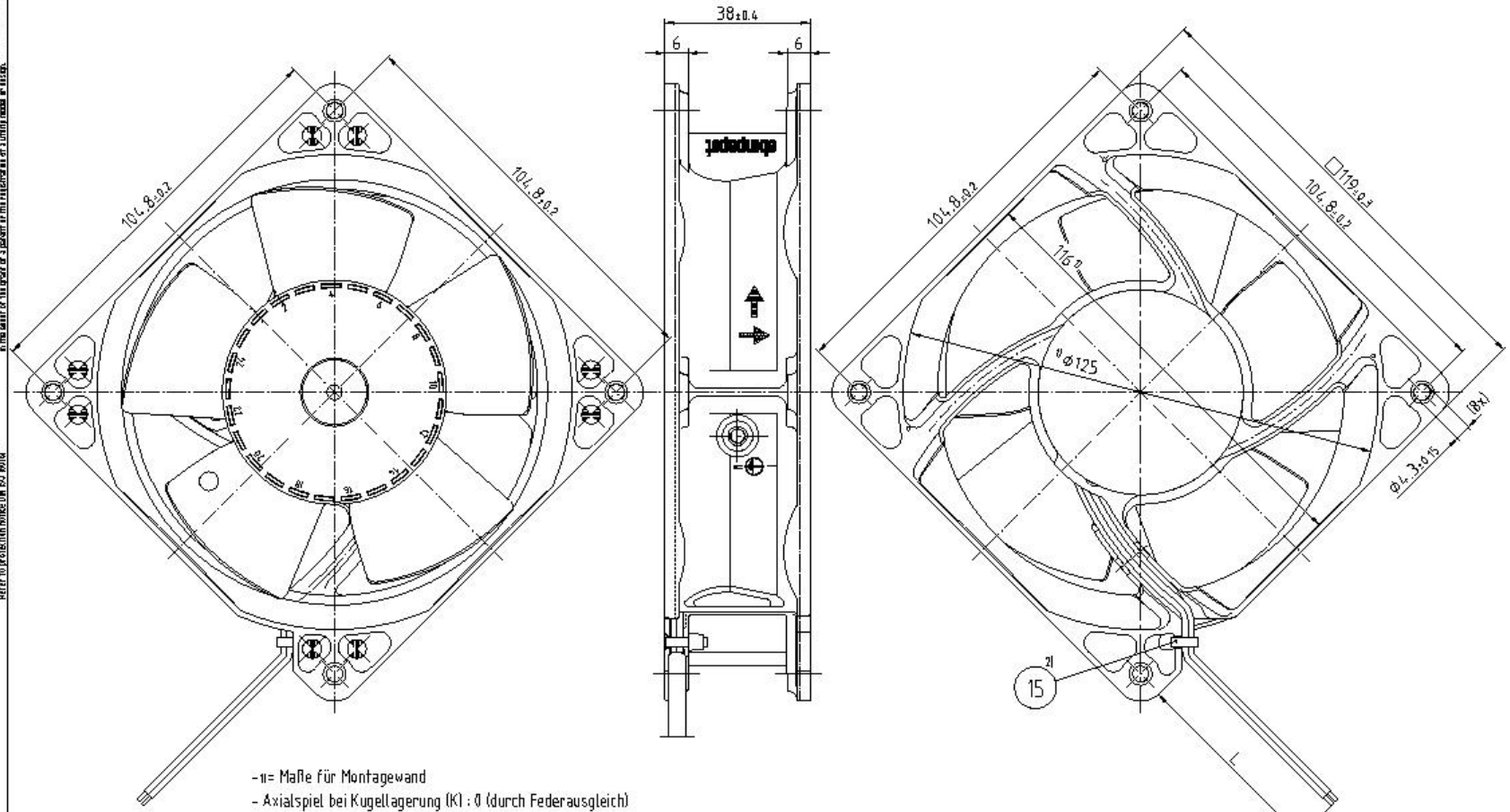

-1= Maße für Montagewand
- Axialspiel bei Kugellagerung (K) : 0 (durch Federausgleich)
- Axialspiel bei Gleitlagerung (G) : 0,1 bis 0,6
-2 = Mit Handhabungswerkzeug montiert,
Kopf darf nach Montage nicht über Außenkontur des Lüftergehäuses stehen

-1= Measures for prefab wall
- Axial play with ball bearing (K): 0 (by spring compensation)
- Axial play with sleeve bearing (G): 0,1 to 0,6
-2 = With handling tool installed,
Head may not stand over outer contour of the fan housing after assembly

Leitungslänge siehe Produktspezifikation
For conduit length see product specification

			ebmpapst	Werkstoff/Material:	Volumen/Volume (mm³)
SAP-Status/Stufe	Aend.-Nr./Change-No.	Auto CAD-System-Version	CAD-Umgebung/ CAD-Environment		Gewicht/Mass (g):
		Datum/Date	Name/Name		
		Bearb./ Drawn		Artikel/Title	
Tolerierung/Tolerancen:		Gepr./ Checked		axial compact fan	
		Freig./ Reldes.			
Allgemeintoleranzen/Gen. tolerances		ebmpapst		Zchg.-Nr./Drawing-No.:	Ers.f.Zchg./Replaces
DIN ISO 2768-1 u. 2-mK					
		ebm-papst St. Georgen GmbH & Co. KG		Dokumentty/Type of Document / Teildokument (Blatt/Page) / Index/Index.	Format/Size / Massstab/scale

11/99

Copying of this document, and giving it to others and the use or communication of the contents thereof, are forbidden without express authority. Offenders are liable to the payment of damages. All rights are reserved in the event of the grant of a patent or the registration of a utility model or design.

Schutzvermerk nach DIN ISO 16016 beachten/
Refer to protection notice DIN ISO 16016