THIS DRAWING IS UNPUBLISHED. RELEASED FOR PUBLICATION – –, .
© COPYRIGHT – By – ALL RIGHTS RESERVED.

LOC	DIST
G	86

REVISIONS

P	LTR	DESCRIPTION	DATE	DWN	APVD
	E2	REVISED PER ECO-11-005027	11MAR11	RK	HMR

AMP WIRE RANGE	FILE E66717	LR7189 Certified
12–10 AWG STRANDED	12–10 AWG STRANDED	12–10 AWG STRANDED

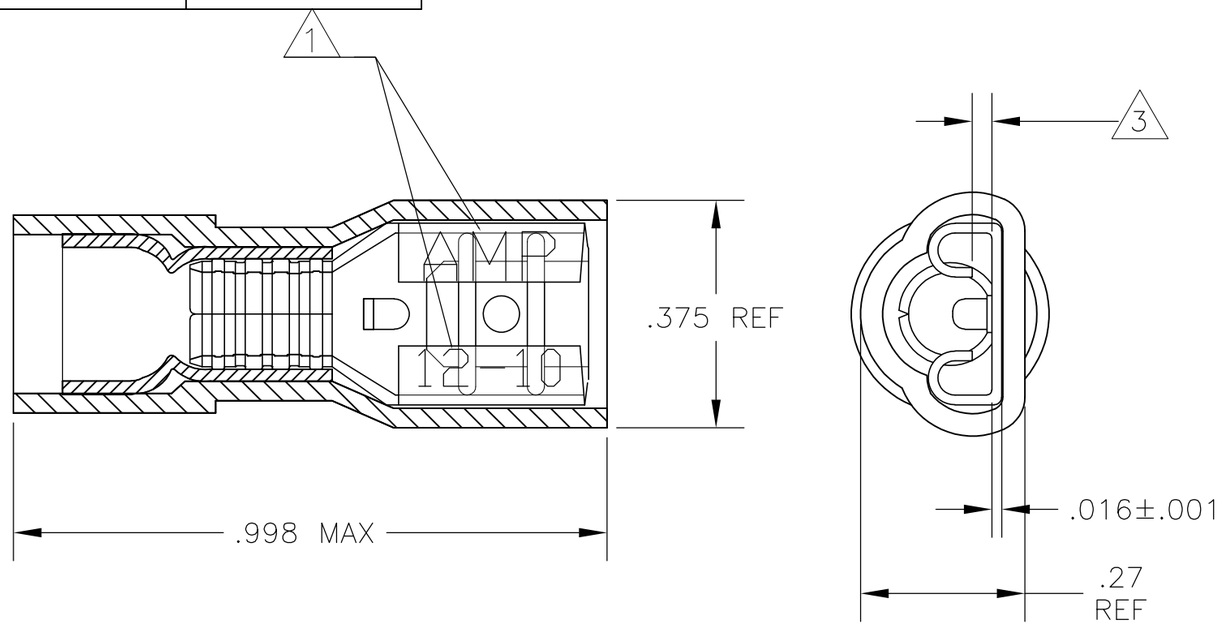

1. MARKED AMP 12-10
2. DESIGNED FOR WIRE INSULATION DIA OF .135-.210.
3. MATES WITH .250±.003 BY .032±.001 THK TAB.
4. BODY: BRASS, TIN PLATED SLEEVE: NYLON, YELLOW
5. RATED FOR 24 MAX AMPERE

QTY	PACKAGE TYPE	PART NO.
100	LOOSE PIECE	8–696371–1
1000	LOOSE PIECE	696371–1

TE CONNECTIVITY CUSTOMER SERVICE SYSTEM

FOR ADDITIONAL PRODUCT INFORMATION OR COPIES OF DRAWING AND TECHNICAL DOCUMENTS	PRODUCT INFORMATION CENTER 1–800–522–6752
FOR APPLICATION TOOLING INFORMATION	TOOLING ASSISTANCE CENTER 1–800–722–1111
FOR ORDER ENTRY	1–800–526–5142

MAX RECOMMENDED OPERATING TEMPERATURE: 105°C [221°F] –

VOLTAGE RATING: 300V MAX –

CIRCULAR MIL AREA: 5,180–13,100 STRANDED

THIS DRAWING IS A CONTROLLED DOCUMENT.

DIMENSIONS: INCHES

TOLERANCES UNLESS OTHERWISE SPECIFIED:

0 PLC	± –
1 PLC	± –
2 PLC	± –
3 PLC	± .008
4 PLC	± –
ANGLES	± –

MATERIAL – 4

FINISH – 4

DWN JR RUTH	07NOV01	
CHK T MICHIELUTTI	07NOV01	
APVD T MICHIELUTTI	07NOV01	
PRODUCT SPEC —		
APPLICATION SPEC 114–13076		
WEIGHT —		

TE Connectivity

NAME: RECEPTACLE, 250 SERIES, FASTON, FULLY INSULATED, WIRE: 12–10 AWG –

SIZE	CAGE CODE	DRAWING NO	RESTRICTED TO
A3	00779	C-696371	—

CUSTOMER DRAWING | SCALE 1:1 | SHEET 1 OF 1 | REV E2

1470–19 (3/11)