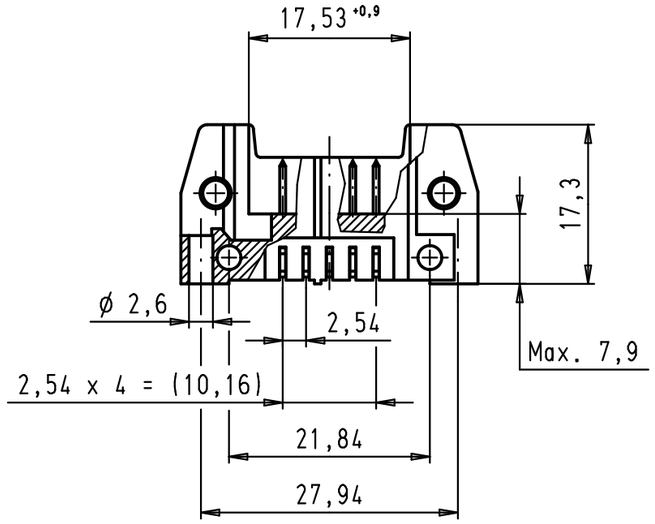

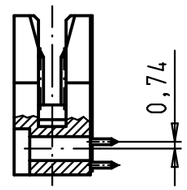

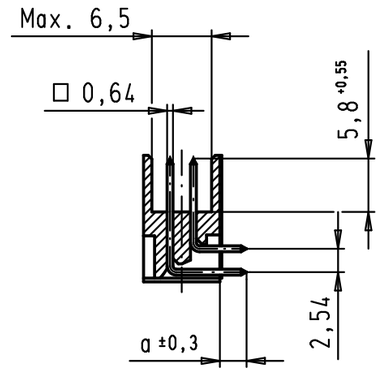

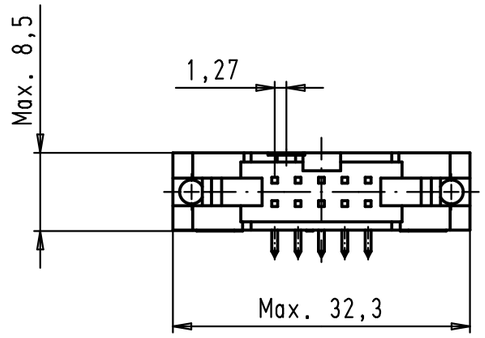

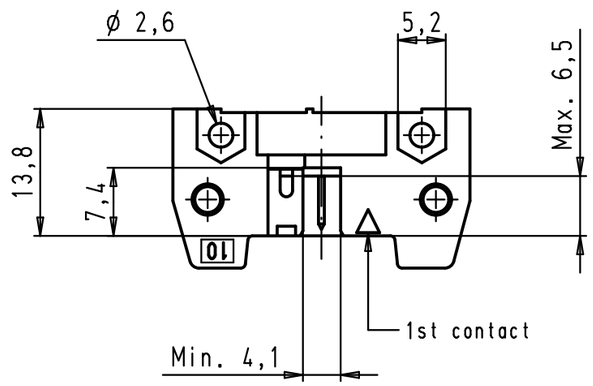

PCB layout, component side

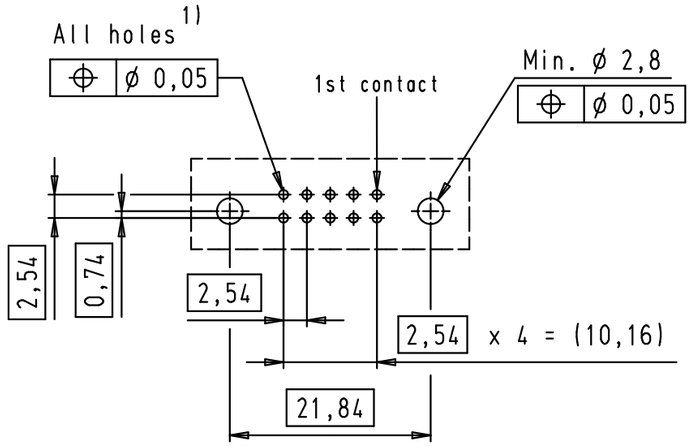

1) Solder pins for PCB connections
ø1±0,1 according to IEC 60 326-3

09 18 510 7921	3	4,5
09 18 510 6921	2	4,5
09 18 510 5921	0,76 µm Au	4,5
09 18 510 7923	3	2,9
09 18 510 6923	2	2,9
09 18 510 5923	0,76 µm Au	2,9
Part number	Performance level	a

				Dat.	Name
34890	01/02/08	PK	Detail.	01/12/99	JB
29753	11/03/02	JB	Insp.		
29739	03/12/01	JB	Stand.		
27931	15/06/00	JB			
26554	01/12/99	JB			
Mod.	Dat.	Name			

All Dim. in mm
Orig. Size DIN A 3

HARTING EURL
F-95972 Paris

SEK 18 Male Connector Standard
10 poles
Angled pins
Without locking levers

Maßstab/ Scale: 1,5:1

TB 09 18 510 X92X

Sub.

Blatt/ Page 2/2

Alle Rechte vorbehalten/ All rights reserved