NO	DESCRIPTION	DATE
1	REDUCE SPRING FROM 2 PCS TO 1 PC	07.07.97'
2	BACKGROUND FORMAT UPDATED	01.24.05'
3	BACKGROUND FORMAT UPDATED	02.04.09'
4	-55° C TO +85° C ⟶ -20°C TO+80° C	06.29.10'
5	WORKING VOLTAGE ⟶ VOLTAGE RATING DEL PROOF VOLTAGE , ADD VSWR	10.09.13'

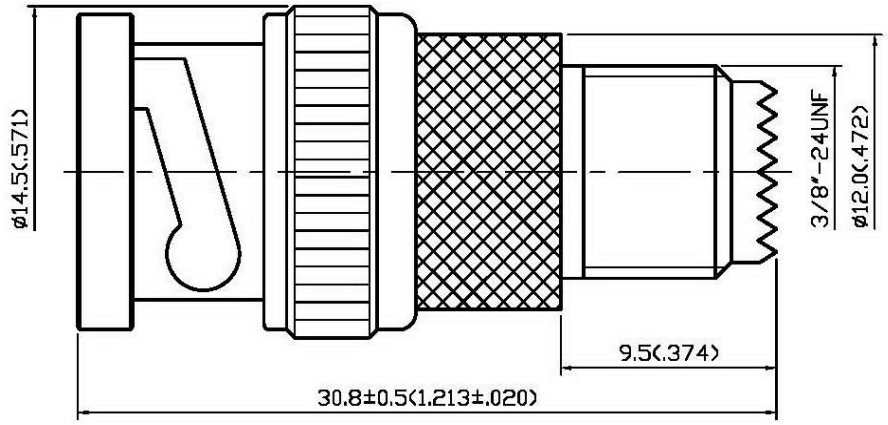

1.0 ELECTRICAL

1.1 FREQUENCY RANGE: DC-2.5 GHz 5
1.2 NOMINAL IMPEDANCE: 50 OHMS
1.3 VOLTAGE RATING: 335 VOLTS MAX. 5
1.4 VSWR: 1.5 MAX. @2 GHz 5

2.0 MATERIALS

2.1 BODIES: BRASS PER JIS-C3604
2.2 CENTER CONTACT: BRASS PER JIS-C3604

3.0 FINISHES AND OTHERS

3.1 SEE BELOW TABLE FOR DETAILS.

4.0 ENVIRONMENTAL

4.1 OPERATING TEMPERATURE RANGE: -20°C TO+60° C 4

NO	DESCRIPTION	MATERIAL	Q'TY	FINISH
9	GASKET	RUBBER	1	RED
8	INSULATION II	POM	1	NONE
7	CENTER CONTACT	BRASS	1	GOLD
6	INSULATION I	POM	1	NONE
5	SPRING WASHER	SK-5	1	NICKEL 1
4	WASHER II	BRASS	1	NICKEL
3	WASHER I	BRASS	1	NICKEL
2	SHELL	BRASS	1	NICKEL 100μ" MIN.
1	BODY	ZINC	1	NICKEL

APPROVED by _____ DATE: _____

DESCRIPTION	STRAIGHT MINI-UHF JACK-BNC PLUG ADAPTER								
製圖	DRAWN: Kristina	TOLERANCE		品名 TITLE	12-17 D.G.Z \ROHS COMPLIANT (50Ω)	日期	DATE 10.13.92'	版次	REV. A-5
		.X	±0.2						
檢圖	CHECK: Arc	.XX	±0.1	單位	UNIT mm(in)	DWG.NO.	12-0046		
		.XXX	±0.05						
認定	APPROVAL: Jenny	ANGLE	±5°	比例	SCALE 4:1				