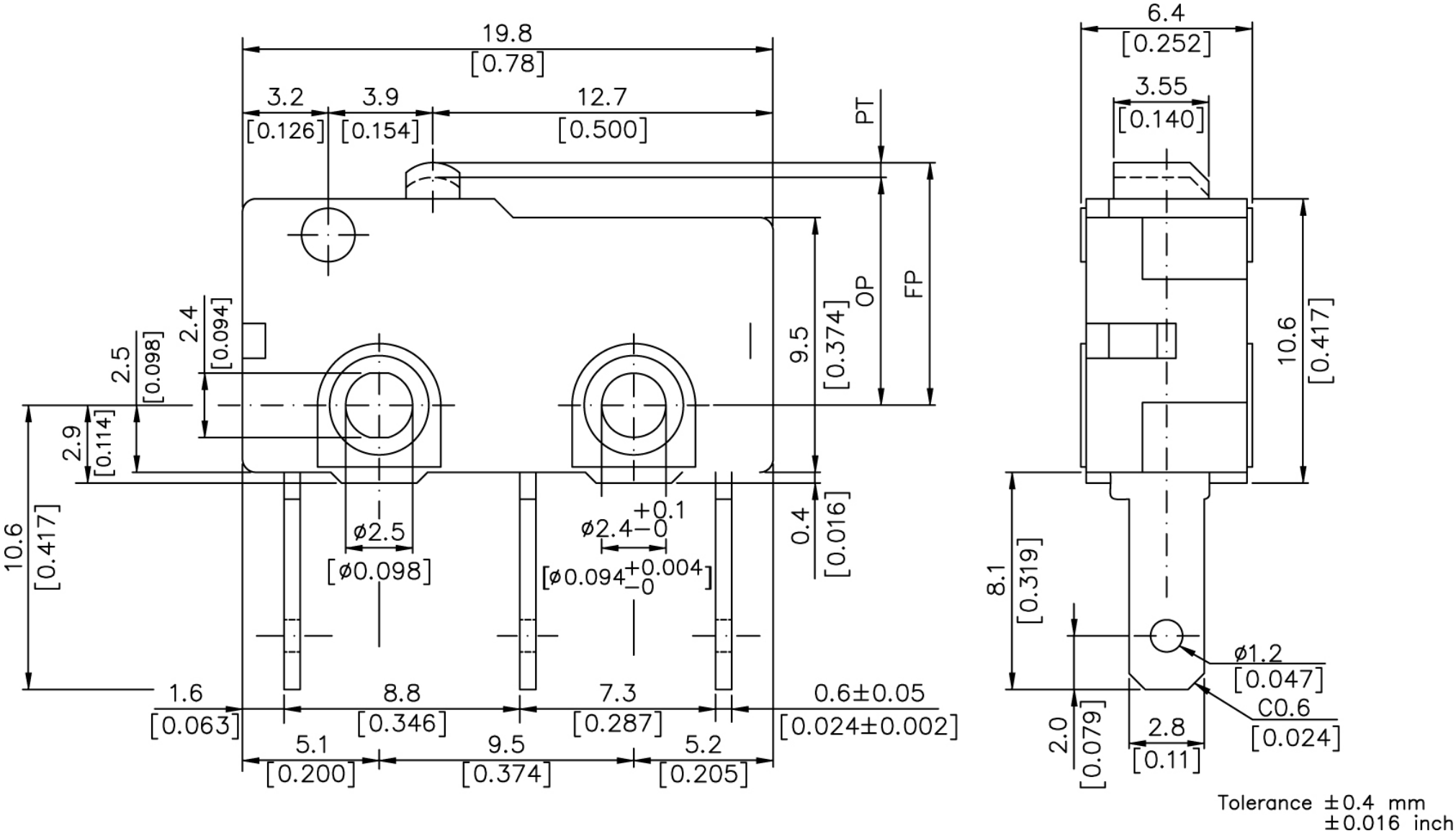
19.8
[0.78]
3.2
[0.126]
3.9
[0.154]
12.7
[0.500]
PT
OP
FP
9.5
[0.374]
2.4
[0.094]
2.5
[0.098]
2.9
[0.114]
10.6
[0.417]
ø2.5
[ø0.098]
ø2.4 +0.1 −0
[ø0.094 +0.004 −0]
0.4
[0.016]
1.6
[0.063]
8.8
[0.346]
7.3
[0.287]
0.6±0.05
[0.024±0.002]
5.1
[0.200]
9.5
[0.374]
5.2
[0.205]
6.4
[0.252]
3.55
[0.140]
10.6
[0.417]
8.1
[0.319]
ø1.2
[0.047]
C0.6
[0.024]
2.0
[0.079]
2.8
[0.11]
Tolerance ±0.4 mm
±0.016 inch