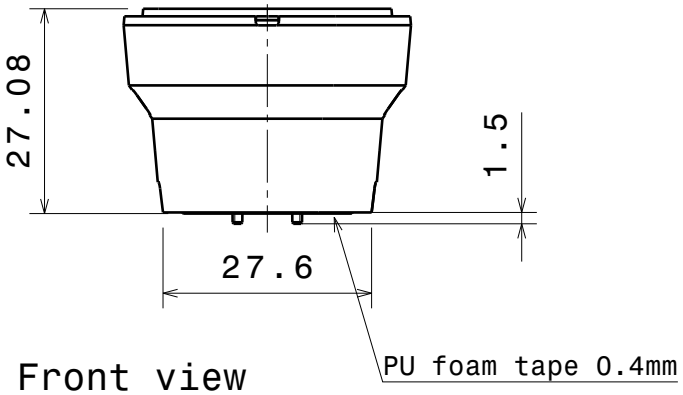

Front view

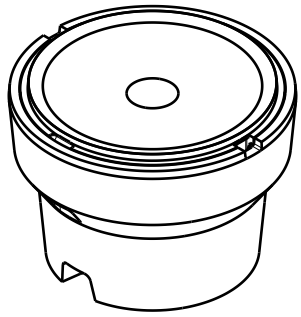

Isometric view

Note:
Optional screw hole,
product comes with tape

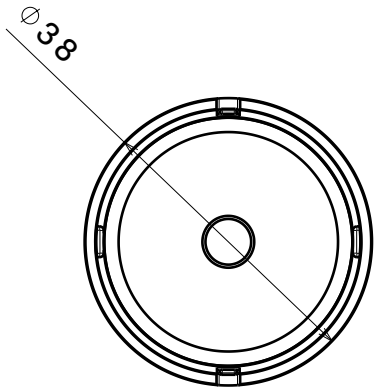

Top view

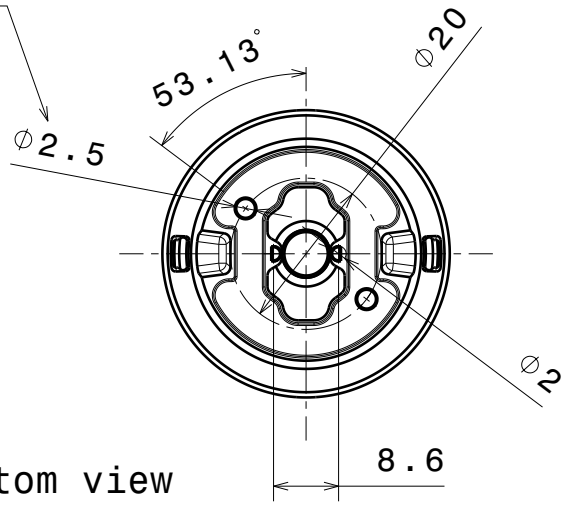

Bottom view

INDEX	PART NO	DESCRIPTION	MATERIAL	COLOUR
1	C12202	IRIS-XP-HLD	PC	black
2	C11361	IRIS	PMMA	clear

Tolerances if not otherwise shown
According to DIN ISO 2768-1
Linear measures:
up to 30mm class M, otherwise class C
According to DIN ISO 2768-2
Form and position: class L

Ledil Oy
Salorankatu 10
FIN 24240 SALO
Finland

THIRD ANGLE PROJECTION:

This drawing is the property of LEDiL Oy. It may not be reproduced, copied or communicated without a written agreement with LEDiL Oy.

DRAWING TITLE

CA11362_IRIS

SIZE A4

PART NUMBER CA11362

SCALE 1:1 | WEIGHT 19,10 g | SHEET 1/1