Panasonic
ideas for life

S Model Switch
Connector Type

AV6 (CS) SWITCHES

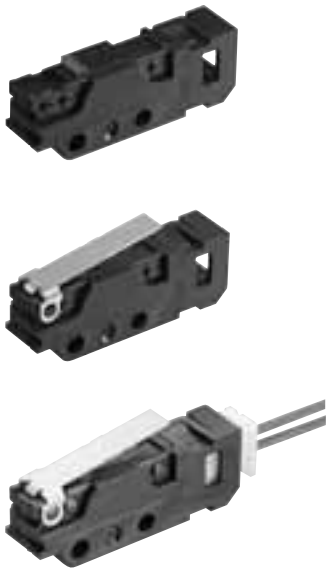

FEATURES

• Using a connector for connections significantly improves operation effectiveness.
Applicable connector:
XA connector produced by JST Mfg. Co., Ltd.
- Contact: SXA-001T-P0.6
- Housing: XAP-02V-1

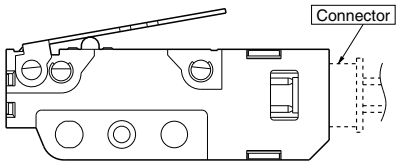

• Contact reliability is achived by simple dust prevension guard and gold-clad double layer contacts

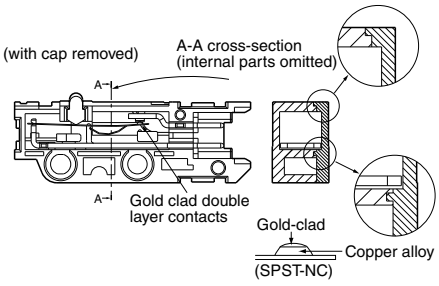

• The contact arrangement is available in two types, the SPST-NC and the SPST-NO.

• The lever position is available in two types.

Standard lever position

"Standard lever position" refers to a position in which the lever is installed with the plunger close to the reference.

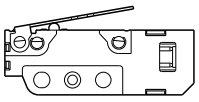

Backward lever position

"Backward lever position" refers to a position in which the lever is installed with the plunger far away from the reference.

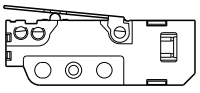

TYPICAL APPLICATIONS

• Detection of vending machine condition whether cans are out of stock
• Ball detection of pinball game machine
• PPC (Plain Paper Copier)
• LBP (Laser Beam Printer)

http://panasonic-denko.co.jp/ac/e/service/environment

ORDERING INFORMATION

Ex. AV6 2 2 2 12 64

Type of switch	Contact arrangement	Actuators	O.F. (by pin plunger)	Lever position	Contacts
AV6: CS switch	2: SPST-NC 3: SPST-NO	0: Pin plunger 2: Hinge lever 4: Simulated roller lever 5: Roller lever	2: 0.50 N 5: 1.50 N	Nil: Standard 12: Backward	64: Gold clad double layer

Remarks: 1. Standard packing Inner carton: 100 pcs. Outer carton: 1,000 pcs.
2. When ordering UL, CSA and TÜV approved types, please attach suffix "3" to the part no.

06/2009

PRODUCT TYPES

1. Lever position: Standard

Actuator	Operating force, Max.	Contact arrangement	
		SPST-NC	SPST-NO
Pin plunger	0.50N	AV620264	AV630264
	1.50N	AV620564	AV630564
Hinge lever	0.20N	AV622264	AV632264
	0.50N	AV622564	AV632564
Simulated roller lever	0.20N	AV624264	AV634264
	0.50N	AV624564	AV634564
Roller lever	0.20N	AV625264	AV635264
	0.50N	AV625564	AV635564

Remarks: 1. When ordering UL, CSA and TÜV approved (under application) types, please attach suffix "3" to the part no.

2. Lever position: Backward

Actuator	Operating force, Max.	Contact arrangement	
		SPST-NC	SPST-NO
Hinge lever	0.35N	AV62221264	AV63221264
	1.00N	AV62251264	AV63251264
Simulated roller lever	0.35N	AV62421264	AV63421264
	1.00N	AV62451264	AV63451264
Roller lever	0.35N	AV62521264	AV63521264
	1.00N	AV62551264	AV63551264

Remarks: 1. When ordering UL, CSA and TÜV approved (under application) types, please attach suffix "3" to the part no.

SPECIFICATIONS

1. Contact rating

Contact	Voltage	Resistive load (cos $\phi \fallingdotseq 1$)
Gold clad double layer	30[V] DC	0.1[A]
	5[V] DC	1[mA] Low-level circuit rating

2. Characteristics

Expected life	Mechanical	Min. 5×10^5 (at 60 cpm) (O.T. max.)
	Electrical (Rated load)	Min. 2×10^5 (at 20 cpm) (O.T. max.)
Insulation resistance		Min. 100MΩ
Dielectric strength	Between terminals	1,000 Vrms for 1 min.
	Between terminals and other exposed metal parts	1,500 Vrms for 1 min.
	Between terminals and ground	1,500 Vrms for 1 min.
Contact resistance (initial)		100MΩ max. (by voltage drop 0.1A 6 to 8 VDC) Value includes the resistance between the connector and the lead (#AWG28, length: 50 mm)
Viblation resistance		10 to 55 Hz at single amplitude of 0.75mm (Contact opening: max. 1msec.)
Shock resistance		Applied shock 1.50N type: Min.300m/s² {Contact opening: Max. 1msec.} 0.50N type: Min.150m/s² {Contact opening: Max. 1msec.}
Connector insertion force		Max. 20N (inserted in removal direction)
Connector holding force		Min. 20N (extracted by static load, in removal direction)
Connector removal operating times		Max. 5 times (in removal direction)
Allowable operating speed (No load)		0.1 to 1,000 mm/s (at pin plunger)
Max. operating cycle rate (No load)		300 cpm
Ambient temperature		–25 to +85°C (No freezing and condensing)
Unit weight		Approx. 2.5g (pin plunger type)

3. Operating characteristics

1) Lever position: Standard

Type of actuator	Operating force, Max.	Release force, Min.	Pretravel, Max. mm	Movement differential, Max, mm	Overtravel, Min. mm	Operating position, mm
Pin plunger	0.50N	0.04N	0.6	0.1	0.4	8.4±0.3
	1.50N	0.25N				
Hinge lever	0.20N	0.02N	2.6	0.8	1.2	10.0±0.8
	0.50N	0.06N				
Simulated roller lever	0.20N	0.02N	2.6	0.8	1.2	12.2±0.8
	0.50N	0.06N				
Roller lever	0.20N	0.02N	2.6	0.8	1.2	15.7±0.8
	0.50N	0.06N				

2) Lever position: Backward

Type of actuator	Operating force, Max.	Release force, Min.	Pretravel, Max. mm	Movement differential, Max, mm	Overtravel, Min. mm	Operating position, mm
Hinge lever	0.35N	0.03N	1.4	0.6	0.7	9.2±0.6
	1.00N	0.10N{				
Simulated roller lever	0.35N	0.03N	1.4	0.6	0.7	11.3±0.6
	1.00N	0.10N				
Roller lever	0.35N	0.03N	1.4	0.6	0.7	14.9±0.6
	1.00N	0.10N				

DIMENSIONS

mm General tolerance: ±0.25

1. Pin plunger

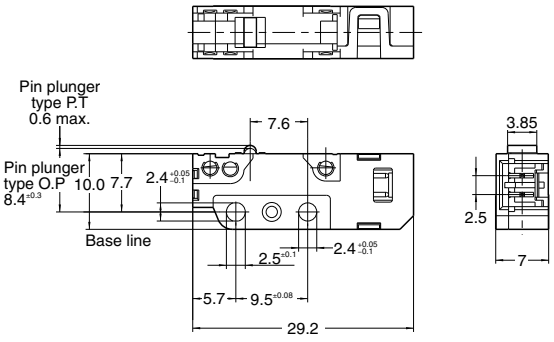

Pretravel, Max. mm		0.6
Movement differential, Max. mm		0.1
Overtravel, Min. mm		0.4
Operating position	Distance from mounting hole, mm	8.4±0.3

2. Hinge lever

Lever position: Standard

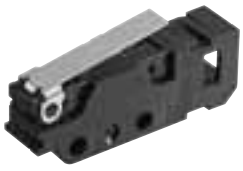

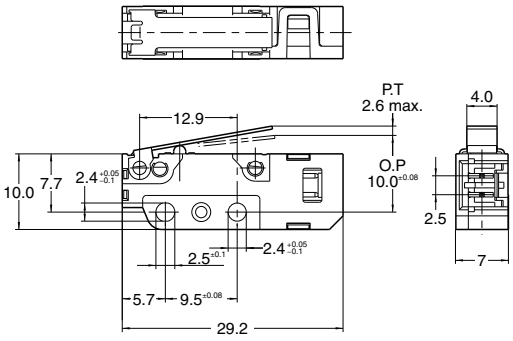

Pretravel, Max. mm		2.6
Movement differential, Max. mm		0.8
Overtravel, Min. mm		1.2
Operating position	Distance from mounting hole, mm	10.0±0.8

Lever position: Backward

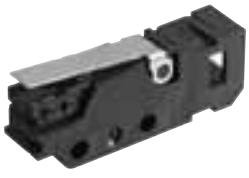

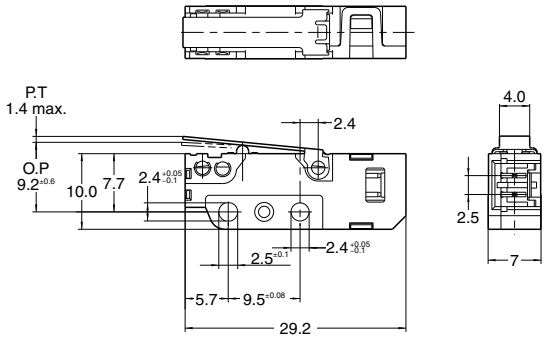

Pretravel, Max. mm		1.4
Movement differential, Max. mm		0.6
Overtravel, Min. mm		0.7
Operating position	Distance from mounting hole, mm	9.2±0.6

3. Simulated roller lever

mm General tolerance: ±0.25

Lever position: Standard

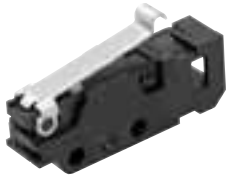

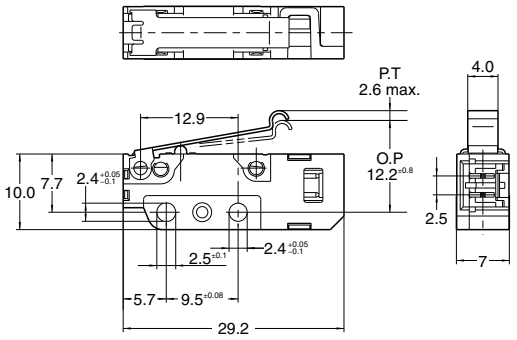

Pretravel, Max. mm		2.6
Movement differential, Max. mm		0.8
Overtravel, Min. mm		1.2
Operating position	Distance from mounting hole, mm	12.2±0.8

Lever position: Backward

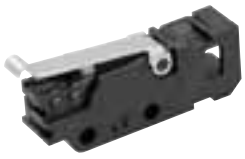

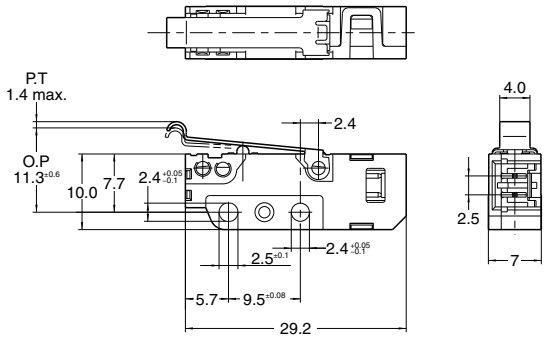

Pretravel, Max. mm		1.4
Movement differential, Max. mm		0.6
Overtravel, Min. mm		0.7
Operating position	Distance from mounting hole, mm	11.3±0.6

4. Roller lever

Lever position: Standard

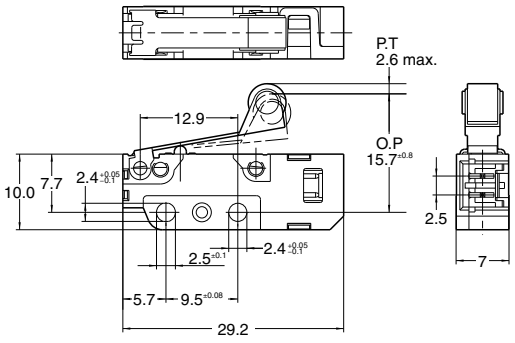

Pretravel, Max. mm		2.6
Movement differential, Max. mm		0.8
Overtravel, Min. mm		1.2
Operating position	Distance from mounting hole, mm	15.7±0.8

Lever position: Backward

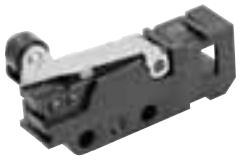

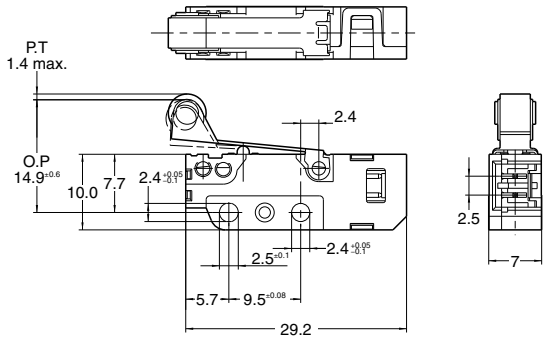

Pretravel, Max. mm		1.4
Movement differential, Max. mm		0.6
Overtravel, Min. mm		0.7
Operating position	Distance from mounting hole, mm	14.9±0.6

NOTES

1. Fastening of the switch body

1) Use flat filister head M2.3 screws to mount switches with less than a 0.29N·m torque. Use of screws washers or adhesive lock is recommended to prevent loosening of the screws.
2) Check insulation distance between ground and each terminal.
3) When the operation object is in the free position, force should not be applied directly to the actuator or pin plunger. Also force should be applied to the pin plunger from vertical direction to the switch.
4) In setting the movement after operation, the over-travel should be set more than 70% as a standard.
With the lever type, do not apply excessive force in the direction opposite to the movement, or from the horizontal direction.
5) For a lever type, the force from the reverse to the operation direction should not be applied.

2. About the connector

1) The connector on the AV6 switch is designed to fit with the XA connector produced by JST Mfg. Co., Ltd. Do not use any connector other than the specified connector, or solder the terminals directly.
2) Make sure leads are arranged so that no constant force is applied to them when the connectors are mated.
3) Keep the connector straight when inserting it. If it is inserted at an angle, it may snag near the entrance, or it may be inserted too forcefully.
4) Problems thought to be caused by the XA connector, which is specified as conforming to the AV6 switch connector, are not covered by the warranty. Please contact JST Mfg., Co., Ltd. and request cooperation in resolving the problem.

3. Selection of the switch

When specifying the switch, allow ±20% to the listed operating characteristics.

4. Environment

Avoid using the switches in the following conditions;
• In corrosive gases, such as silicon gas
• In a dusty environment
When cleaning the switch, use a diluted form of a neutral cleaning agent. Using acidic or alkali solvents can adversely affect the performance of the switch.

5. Precautions concerning circuits

The AV6 switch is designed specifically for low-voltage, low-current loads. Avoid using it at loads that exceed the resistive load.

6. Quality check under actual loading conditions

To assure reliability, check the switch under actual loading conditions. Avoid any situation that may adversely affect switching performance.