Fuse holder terminal blocks

for 5 x 20 mm and 5 x 25 mm fuses

Compression clamp

DIN 1 - DIN 3

**Blocks with LED indicator are labeled "+" on the outside of the lever. The indicator can be reversed in the field if required.*

*** Terminal block with low temperature surfacing :*
Storage -60°C
Use -20°C

End stop	th. 9,1 mm	**BADL**	V0	**0199 408.02**
End stop	th. 9,1 mm	**BAM**		**0103 002.26**
Other end stops : See Accessories section				
Rail	35 x 7,5 x 1	**PR30**	prepunched	**0173 220.05**
Rail	35 x 15 x 2,3	**PR4**		**0168 500.12**
Rail	35 x 15 x 1,5	**PR5**	prepunched	**0101 598.26**
Rail	32 x 15	**PR1Z2**		**0163 050.04**
Other rails : See Accessories section				

Notes

The use of some accessories may decrease the block's voltage rating. For more information, consult us.

Block matching fuse terminal block M 4/8.SF for line, fuse applications, see page 137.

Type	*Part number*
M 4/8	***0115 523.07***

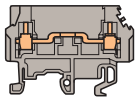

M 4/8.SF...

Spacing 8 mm *(.315")*

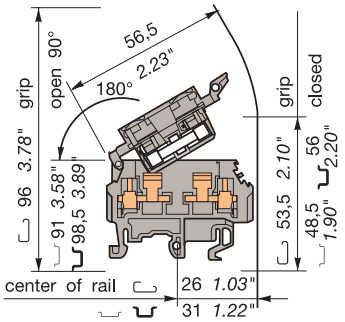

Standard 8 mm block.

Color	Type	Part numbers
Grey	**M 4/8.SF**	**0115 657.25**
Grey **	**M 4/8.SF1.TS**	**0115 658.06**
Orange	**M 4/8.SF2**	**0105 135.11**
Beige V0	**M 4/8.SF.V0**	**0195 657.26**

Characteristics

Wire size		IEC NFC DIN	UL	CSA
Compression clamp	Solid wire	0,5-4 mm²	22-12 AWG	24-12 AWG
	Stranded wire	0,5-4 mm²	22-12 AWG	24-12 AWG

Voltage			
Rated	630 V (1)	600 V (1)	250 V
Pulse	8 kV		
Pollution degree	3		

Current			
Rated	6,3 A	10 A	10 A

Wire size			
Rated / Gauge	4 mm² / A4	12 AWG	12 AWG

Wire stripping length	Recomm. screwdriver	Recomm. torque	Protection
9,5 mm *.37"*	4 mm *.157"*	0,5-0,8 Nm *4.4-7 lb.in*	IP 20 (2) *NEMA 1*

M 4/8.SFT

Spacing 8 mm *(.315")*

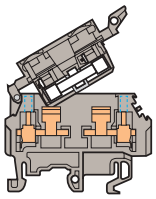

M 4/8.SF equipped with two test sockets DIA. 2 mm/.079".

Color	Type	Part numbers
Grey	**M 4/8.SFT**	**0115 662.22**
Beige V0	**M 4/8.SFT.V0**	**0195 662.23**

Characteristics

Wire size		IEC NFC DIN	UL	CSA
Compression clamp	Solid wire	0,5-4 mm²	22-12 AWG	24-12 AWG
	Stranded wire	0,5-4 mm²	22-12 AWG	24-12 AWG

Voltage			
Rated	400 V (1)	600 V (1)	250 V
Pulse	4 kV		
Pollution degree	3		

Current			
Rated	6,3 A	6,3 A	10 A

Wire size			
Rated / Gauge	4 mm² / A4	12 AWG	12 AWG

Wire stripping length	Recomm. screwdriver	Recomm. torque	Protection
9,5 mm *.37"*	4 mm *.157"*	0,5-0,8 Nm *4.4-7 lb.in*	IP 20 (2) *NEMA 1*

Accessories

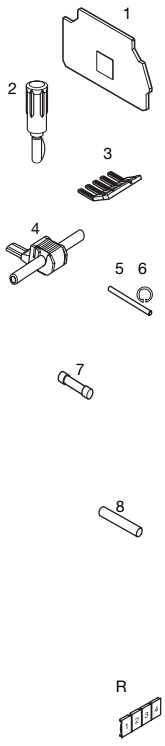

			Type		Part numbers	Type		Part numbers
1	End section	grey	**FEM8S**	V2 th. 1,5 mm	**0116 951.15**	**FEM8S**	V2 th. 1,5 mm	**0116 951.15**
		orange	**FEM8S**	V2 th. 1,5 mm	**0103 923.15**	**FEM8S**	V2 th. 1,5 mm	**0103 923.15**
		beige	**FEM8S**	V0 th. 1,5 mm	**0196 951.16**	**FEM8S**	V0 th. 1,5 mm	**0196 951.16**
2	Test plug					**FC2**	DIA. 2 mm	**0007 865.22**
3	Comb type jumper bar	35 A	**PC81**	10 poles	**0173 523.11**	**PC81**	10 poles	**0173 523.11**
4	IDC jumper		**AD2,5**		**0114 205.20**	**AD2,5**	DIA. 2 mm	**0114 205.20**
5	Assembly rod		**TGA8**	2 poles	**0168 672.11**	**TGA8**	2 poles	**0168 672.11**
				3 poles	**0168 773.12**		3 poles	**0168 773.12**
				4 poles	**0168 674.13**		4 poles	**0168 674.13**
6	Assembly ring		**ANT**		**0168 675.14**	**ANT**		**0168 675.14**
7	Fuses 5 x 20 mm	250 V	**FU520**	5 x 20		**FU520**	5 x 20	
				0,5 A	**0008 288.15**		0,5 A	**0008 288.15**
				1 A	**0008 290.13**		1 A	**0008 290.13**
				2 A	**0008 291.00**		2 A	**0008 291.00**
				3,15 A	**0008 289.16**		3,15 A	**0008 289.16**
				4 A	**0168 834.24**		4 A	**0168 834.24**
				5 A	**0008 292.01**		5 A	**0008 292.01**
	Fuses 5 x 25 mm	250 V	**FU525**	5 x 25		**FU525**	5 x 25	
	Fast fusion HPC 1500 A			1,6 A	**0167 546.22**		1,6 A	**0167 546.22**
				2 A	**0167 547.23**		2 A	**0167 547.23**
				2,5 A	**0167 548.04**		2,5 A	**0167 548.04**
				4 A	**0167 549.05**		4 A	**0167 549.05**
				6,3 A	**0167 550.02**		6,3 A	**0167 550.02**
8	Disconnect link bar		**CN5**		**0179 371.16**	**CN5**		**0179 371.16**
R	See section on markers marking method		(6) RC610 on grip	(17) RC810 on side		(6) RC610 on grip	(17) RC810 on side	

Note : (1) Insulation voltage of terminal block - operating voltage : in accordance with fuse rating.
(2) Protection index for closed block.