THIS DRAWING IS UNPUBLISHED. RELEASED FOR PUBLICATION
© COPYRIGHT - BY - ALL RIGHTS RESERVED.

| LOC | DIST |
|---|---|
| DY | - |

REVISIONS

| P | LTR | DESCRIPTION | DATE | DWN | APVD |
|---|---|---|---|---|---|
| | E1 | REVISED PER ECO-11-005139 | 19MAR11 | RK | HMR |

Notes:

1. CUTOUT FEATURE AVAILABLE ONLY ON 5H ASSY P/N -1 (40P) AND -2 (60P).
2. 0.00038 MIN GOLD PLATING (15u INCHES GOLD PLATING)

| | REMARKS | QTY | HEIGHT TYPE | J | H | G | F | E | D | C | B | A | POS | CONN P/N | PART NO. |
|---|---|---|---|---|---|---|---|---|---|---|---|---|---|---|---|
| | 0.00076 MIN GOLD PLATING (30u INCHES GOLD PLATING) | | | | | | | | 61.8 | 88 | 84.4 | 42.2 | 140 | 1- -6 | 7- -6 |
| | | | | | | | | | 53.8 | ↑ | ↑ | ↑ | 120 | 1- -5 | 7- -5 |
| | | 450 | | | 16 | | | | 45.8 | 72 | 68.4 | 34.2 | 100 | 1- -4 | 7- -4 |
| | | | | | | | | | 37.8 | 56 | 52.4 | 26.2 | 80 | 1- -3 | 7- -3 |
| | | | | | | | | | 29.8 | 44 | 40.4 | 20.2 | 60 | 1- -2 | 7- -2 |
| | | 700 | 7H | | 12 | | 6.85 | 7.25 | 21.8 | 32 | 28.4 | 14.2 | 40 | 1-5179030-1 | 7-5177986-1 |
| | | | | | | | | | 69.8 | ↑ | ↑ | ↑ | 160 | -8 | 6- -8 |
| | | | | | | | | | 61.8 | 88 | 84.4 | 42.2 | 140 | -6 | 6- -6 |
| | | | | | | | | | 53.8 | ↑ | ↑ | ↑ | 120 | -5 | 6- -5 |
| | | 550 | | | 16 | | | | 45.8 | 72 | 68.4 | 34.2 | 100 | -4 | 6- -4 |
| | | | | | | | | | 37.8 | 56 | 52.4 | 26.2 | 80 | -3 | 6- -3 |
| | | | | | | | | | 29.8 | 44 | 40.4 | 20.2 | 60 | -2 | 6- -2 |
| | | 800 | 6H | | 12 | | 5.85 | 6.25 | 21.8 | 32 | 28.4 | 14.2 | 40 | 5084615-1 | 6-5177986-1 |
| | | | | | | | | | 69.8 | ↑ | ↑ | ↑ | 160 | -8 | 5- -8 |
| | | | | | | | | | 61.8 | 88 | 84.4 | 42.2 | 140 | -6 | 5- -6 |
| | | | | | | | | | 53.8 | ↑ | ↑ | ↑ | 120 | -5 | 5- -5 |
| | | 650 | | | 16 | | | | 45.8 | 72 | 68.4 | 34.2 | 100 | -4 | 5- -4 |
| | | | | | | | | | 37.8 | 56 | 52.4 | 26.2 | 80 | -3 | 5- -3 |
| | | | | | | | | | 29.8 | 44 | 40.4 | 20.2 | 60 | -2 | 5- -2 ⚠1 |
| | | 900 | 5H | 12 | 12 | 17 | 4.85 | 5.25 | 21.8 | 32 | 28.4 | 14.2 | 40 | 5084614-1 | 5-5177986-1 ⚠1 |
| ⚠2 | | 450 | 7H | 12 | 16 | 17 | 6.85 | 7.25 | 53.8 | 72 | 68.4 | 34.2 | 120 | 3-5179030-5 | 4-5177986-5 |
| | 0.00002 MIN GOLD PLATING (7.8u INCHES GOLD PLATING) | | | | | | | | 85.8 | ↑ | ↑ | ↑ | 200 | 1- -0 | 4- -0 |
| | | | | | | | | | 77.8 | 104 | 100.4 | 50.2 | 180 | -9 | 3- -9 |
| | | | | | | | | | 69.8 | ↑ | ↑ | ↑ | 160 | -8 | 3- -8 |
| | | | | | | | | | 61.8 | 88 | 84.4 | 42.2 | 140 | -6 | 3- -6 |
| | | | | | | | | | 53.8 | ↑ | ↑ | ↑ | 120 | -5 | 3- -5 |
| | | 400 | | | 16 | | | | 45.8 | 72 | 68.4 | 34.2 | 100 | -4 | 3- -4 |
| | | | | | | | | | 37.8 | 56 | 52.4 | 26.2 | 80 | -3 | 3- -3 |
| | | | | | | | | | 29.8 | 44 | 40.4 | 20.2 | 60 | -2 | 3- -2 |
| | | 600 | 8H | | 12 | | 7.85 | 8.25 | 21.8 | 32 | 28.4 | 14.2 | 40 | 5179031-1 | 3-5177986-1 |
| | | | | | | | | | 85.8 | ↑ | ↑ | ↑ | 200 | 1- -0 | 3- -0 |
| | | | | | | | | | 77.8 | 104 | 100.4 | 50.2 | 180 | -9 | 2- -9 |
| | | | | | | | | | 69.8 | ↑ | ↑ | ↑ | 160 | -8 | 2- -8 |
| | | | | | | | | | 61.8 | 88 | 84.4 | 42.2 | 140 | -6 | 2- -6 |
| | | | | | | | | | 53.8 | ↑ | ↑ | ↑ | 120 | -5 | 2- -5 |
| | | 450 | | | 16 | | | | 45.8 | 72 | 68.4 | 34.2 | 100 | -4 | 2- -4 |
| | | | | | | | | | 37.8 | 56 | 52.4 | 26.2 | 80 | -3 | 2- -3 |
| | | | | | | | | | 29.8 | 44 | 40.4 | 20.2 | 60 | -2 | 2- -2 |
| | | 700 | 7H | | 12 | | 6.85 | 7.25 | 21.8 | 32 | 28.4 | 14.2 | 40 | 5179030-1 | 2-5177986-1 |
| | | | | | | | | | 61.8 | 88 | 84.4 | 42.2 | 140 | -6 | 1- -6 |
| | | | | | | | | | 53.8 | ↑ | ↑ | ↑ | 120 | -5 | 1- -5 |
| | | 550 | | | 16 | | | | 45.8 | 72 | 68.4 | 34.2 | 100 | -4 | 1- -4 |
| | | | | | | | | | 37.8 | 56 | 52.4 | 26.2 | 80 | -3 | 1- -3 |
| | | | | | | | | | 29.8 | 44 | 40.4 | 20.2 | 60 | -2 | 1- -2 |
| | | 800 | 6H | | 12 | | 5.85 | 6.25 | 21.8 | 32 | 28.4 | 14.2 | 40 | 5179029-1 | 1-5177986-1 |
| | | | | | | | | | 69.8 | ↑ | ↑ | ↑ | 160 | -8 | -8 |
| | | | | | | | | | 61.8 | 88 | 84.4 | 42.2 | 140 | -6 | -6 |
| | | | | | | | | | 53.8 | ↑ | ↑ | ↑ | 120 | -5 | -5 |
| | | 650 | | | 16 | | | | 45.8 | 72 | 68.4 | 34.2 | 100 | -4 | -4 |
| | | | | | | | | | 37.8 | 56 | 52.4 | 26.2 | 80 | -3 | -3 |
| | | | | | | | | | 29.8 | 44 | 40.4 | 20.2 | 60 | -2 | -2 ⚠1 |
| | | 900 | 5H | 12 | 12 | 17 | 4.85 | 5.25 | 21.8 | 32 | 28.4 | 14.2 | 40 | 5177984-1 | 5177986-1 ⚠1 |

AMP 1470-19 REV 09MAY94

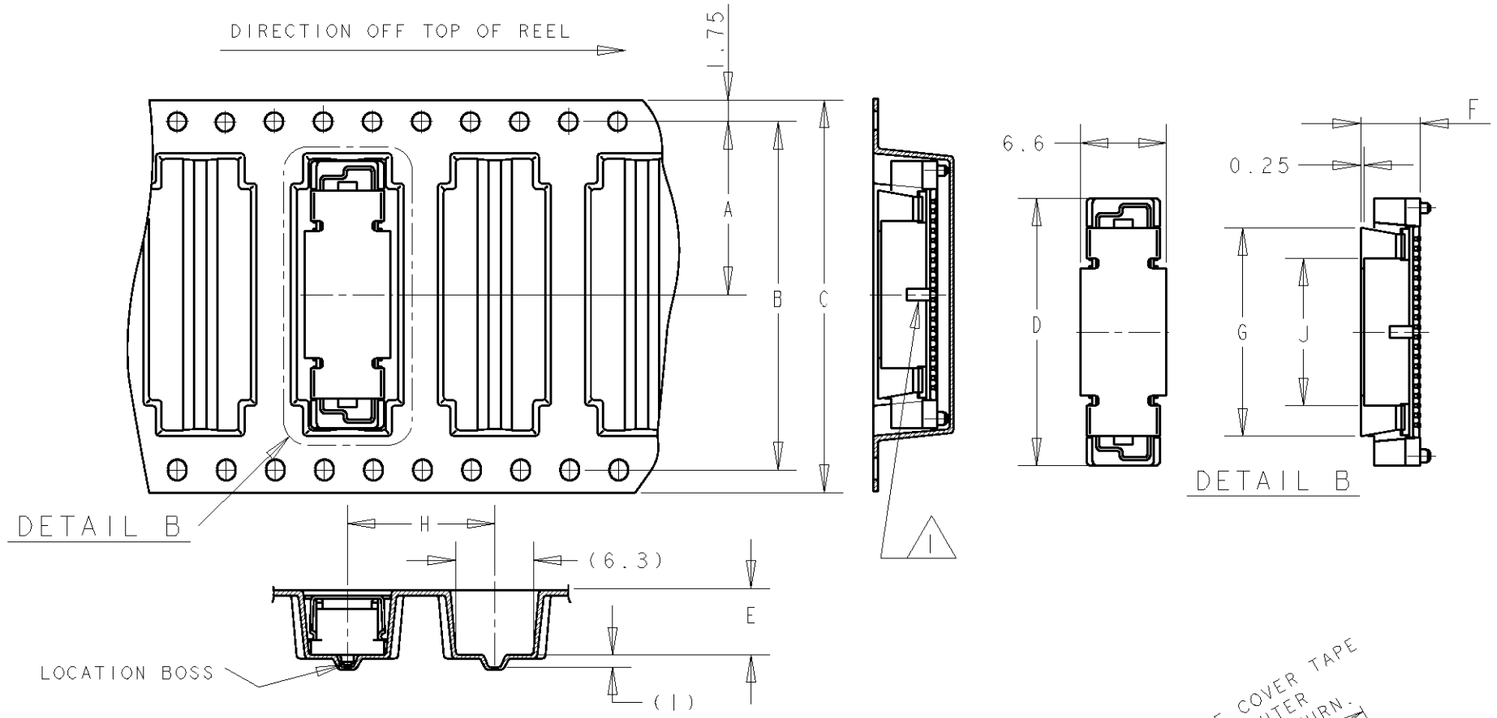


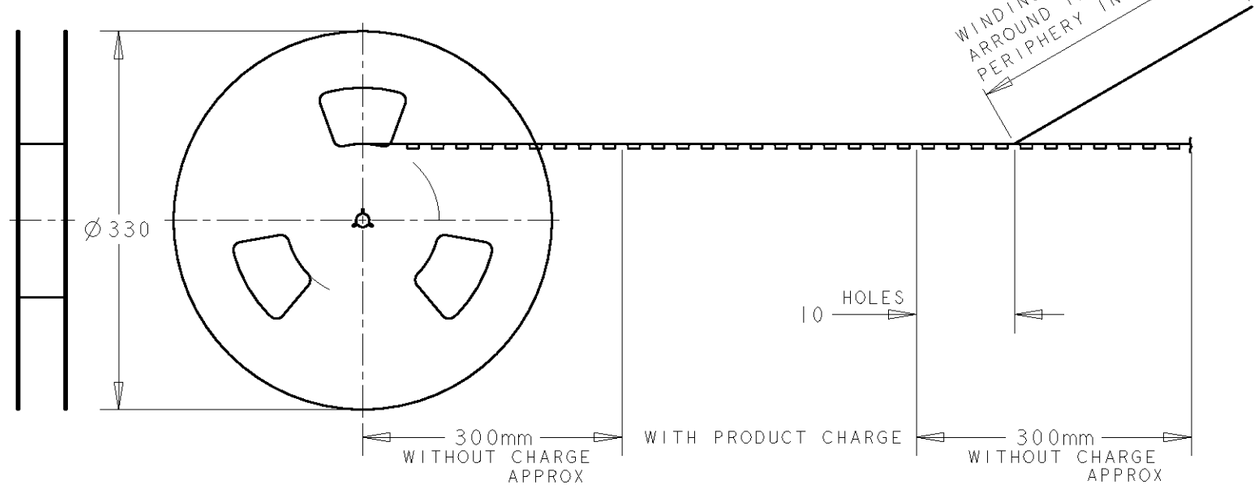


| | | | |
|---|---|---|---|
| DIMENSIONS: mm | TOLERANCES UNLESS OTHERWISE SPECIFIED: 0 PLC ±- 1 PLC ±0.3 2 PLC ±0.25 3 PLC ±0.2 4 PLC ±- ANGLES ±3° | DWN FLORENCE TAN 30AUG04 | TE Connectivity |
| | | CHK ERIC TNG | NAME PLUG ASSEMBLY (0.5 BOSS LENGTH) FOR FH 0.8 B-T-B CONN. ON TAPING |
| | | APVD SF LEONG | |
| | | PRODUCT SPEC 108-5390 | |
| | | APPLICATION SPEC 114-5254 | SIZE A3 / CAGE CODE 00779 / DRAWING NO C-5177986 |
| MATERIAL - | FINISH - | WEIGHT - | |
| | | CUSTOMER DRAWING | SCALE 2:1 / SHEET 1 OF 1 / REV E1 |