⚠Note • This PDF catalog is downloaded from the website of Murata Manufacturing co., ltd. Therefore, it's specifications are subject to change or our products in it may be discontinued without advance notice. Please check with our sales representatives or product engineers before ordering.
• This PDF catalog has only typical specifications because there is no space for detailed specifications. Therefore, please approve our product specifications or transact the approval sheet for product specifications before ordering.

Ceramic Resonators (CERALOCK®)

MHz Chip Type -Standard Frequency Tolerance for General Usage-

Chip type "CERALOCK" with built-in load capacitors provides extremely small package.
MURATA's package technology expertise has enabled the development of the Chip "CERALOCK" with built-in load capacitors.
High-density mounting can be realized because of the small package and the elimination of the need for an external load capacitor.

■ Features

1. Oscillation circuits do not require external load capacitors.
2. The series is available in a wide frequency range.
3. The resonators are extremely small and have a low profile.
4. No adjustment is necessary for oscillation circuits.

■ Applications

1. Clock oscillators for microprocessors
2. Small electronic equipment such as hand held phone, digital video camcorder (DVC), digital still camera (DSC), portable audio player, etc.
3. Storage media and memory (HDD, Optical storage device, FDD, Flash memory card, etc.)
4. Office automation equipment (Mobile PC, Mouse, Keyboard, etc.)
5. Audio-visual applications (TV, DVD-HDD recorder, Audio equipment, Remote controller, etc.)
6. Home appliances (Air conditioner, Microwave oven, Refrigerator, Washing machine, etc.)

CSTCC_G
2.00-3.99MHz

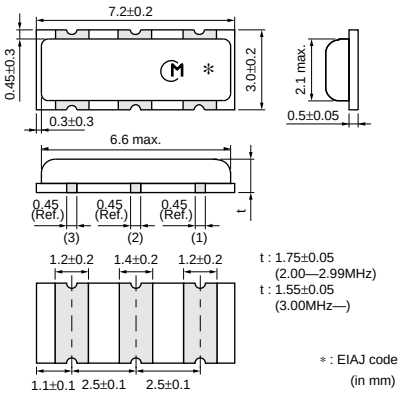

CSTCR_G
4.00-7.99MHz

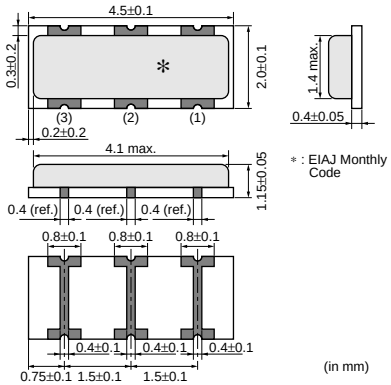

CSTCE_G
8.00-13.99MHz

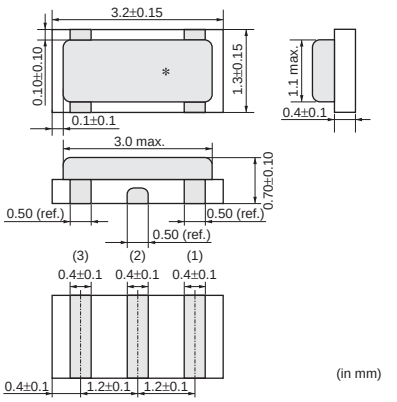

CSTCE_V
14.00-20.00MHz

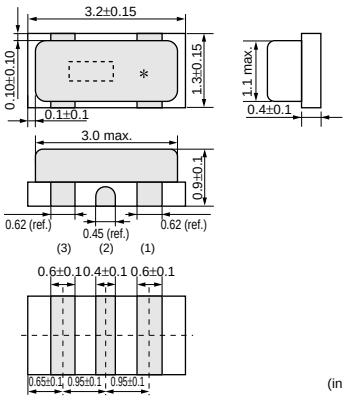

CSTCG_V
20.00-33.86MHz
(Ultra Small)

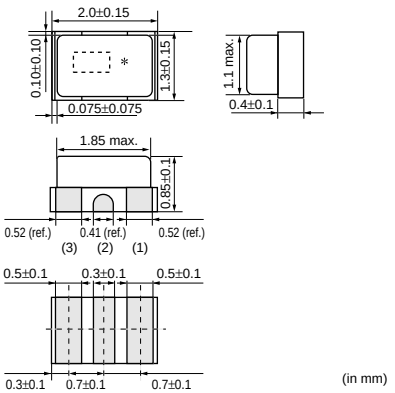

Continued on the following page.

Continued from the preceding page.

CSACW_X
20.01-70.00MHz

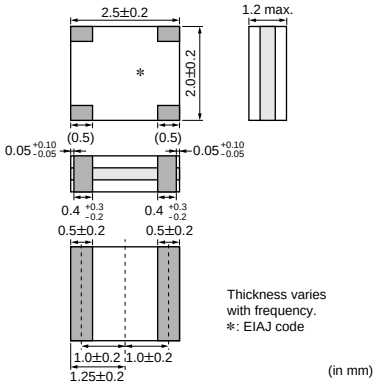

CSTCW_X
20.01-70.00MHz

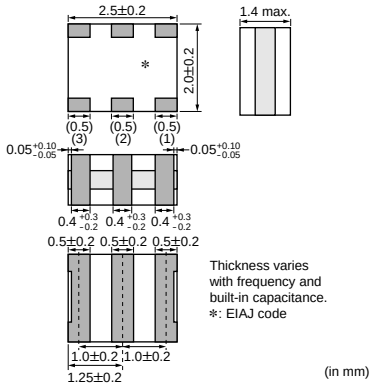

CSTCW_X_M
25.00-48.00MHz
(Urtra Thin)

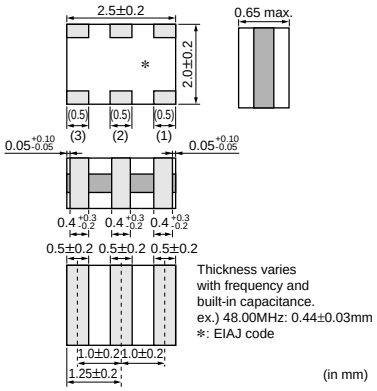

Part Number	Oscillating Frequency (MHz)	Initial Tolerance	Temp. Stability (%)	Temperature Range (°C)
CSTCC_G	2.00 to 3.99	±0.5%	±0.3 [±0.4%:Built-in Capacitance 47pF type within Freq.2.00 to 3.49MHz]	-20 to 80
CSTCR_G	4.00 to 7.99	±0.5%	±0.2	-20 to 80
CSTCE_G	8.00 to 13.99	±0.5%	±0.2	-20 to 80
CSTCE_G_Z	8.00 to 13.99	±0.5%	±0.2	-40 to 125
CSTCE_V	14.00 to 20.00	±0.5%	±0.3	-20 to 80
CSTCG_V	20.00 to 33.86	±0.5%	±0.3	-20 to 80
CSACW_X	20.01 to 70.00	±0.5%	±0.2	-20 to 80
CSTCW_X	20.01 to 70.00	±0.5%	±0.2	-20 to 80
CSTCW_X_M	25.00 to 48.00	±0.5%	±0.2	-20 to 80

Irregular or stop oscillation may occur under unmatched circuit conditions. Please check the actual conditions prior to use.

⚠Note • This PDF catalog is downloaded from the website of Murata Manufacturing co., ltd. Therefore, it's specifications are subject to change or our products in it may be discontinued without advance notice. Please check with our sales representatives or product engineers before ordering.
• This PDF catalog has only typical specifications because there is no space for detailed specifications. Therefore, please approve our product specifications or transact the approval sheet for product specifications before ordering.

■ Oscillation Frequency Measuring Circuit

CSTCR_G/CSTCE_G/CSTCE_V/CSTCG_V

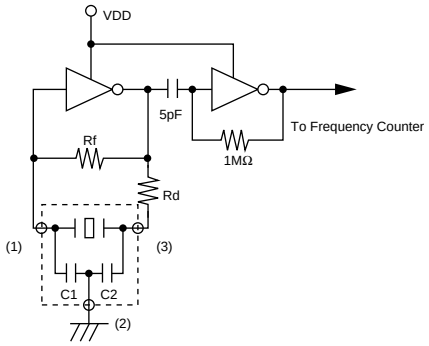

CSTCC_G/CSTCW_X

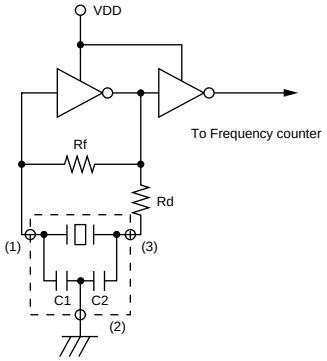

CSACW_X

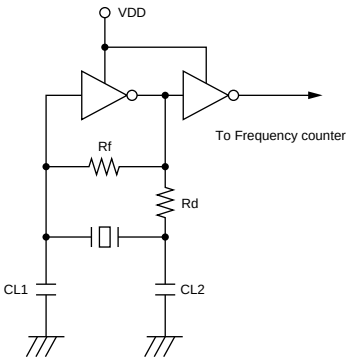

CSTCW_X_M

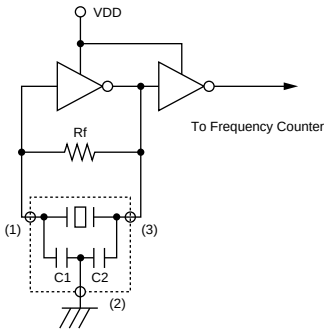

4

⚠Note • This PDF catalog is downloaded from the website of Murata Manufacturing co., ltd. Therefore, it's specifications are subject to change or our products in it may be discontinued without advance notice. Please check with our sales representatives or product engineers before ordering.
• This PDF catalog has only typical specifications because there is no space for detailed specifications. Therefore, please approve our product specifications or transact the approval sheet for product specifications before ordering.

■ Standard Land Pattern Dimensions

CSTCC_G

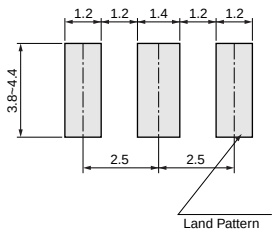

(in mm)

CSTCR_G

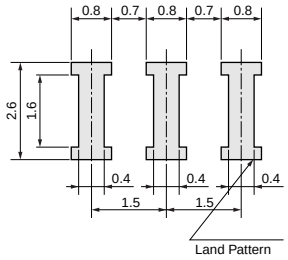

(in mm)

CSTCE_G

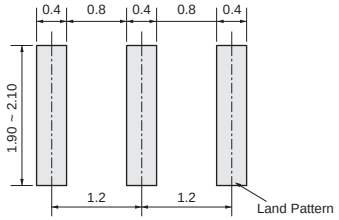

(in mm)

CSTCE_V

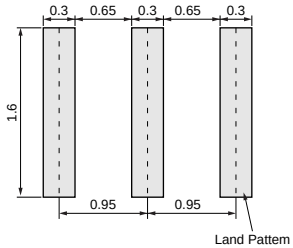

(in mm)

CSTCG_V

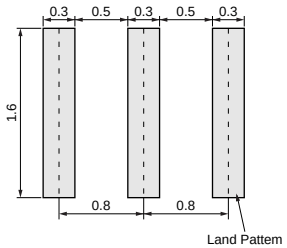

(in mm)

CSACW_X

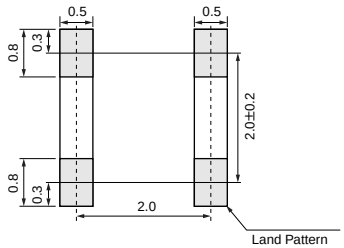

(in mm)

CSTCW_X

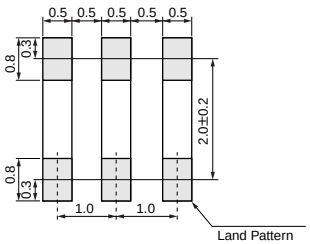

(in mm)

CSTCW_X_M

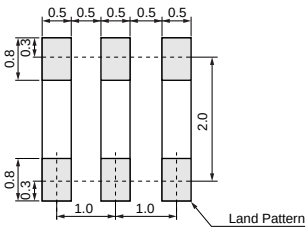

(in mm)

⚠Note • This PDF catalog is downloaded from the website of Murata Manufacturing co., ltd. Therefore, it's specifications are subject to change or our products in it may be discontinued without advance notice. Please check with our sales representatives or product engineers before ordering.
• This PDF catalog has only typical specifications because there is no space for detailed specifications. Therefore, please approve our product specifications or transact the approval sheet for product specifications before ordering.

■ Oscillation Frequency Temperature Stability

CSTCC_G

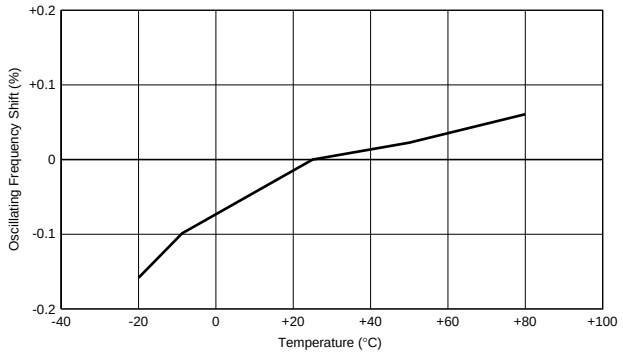

CSTCR_G

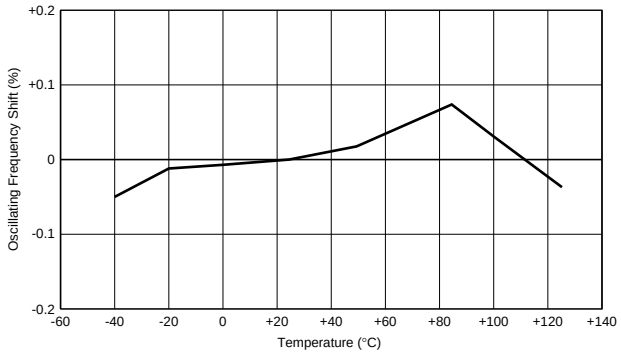

CSTCE_G

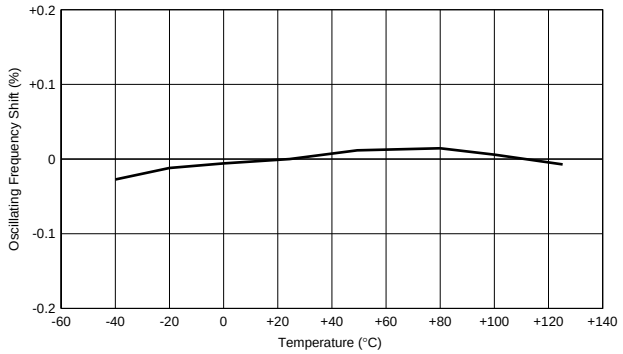

CSTCE_V

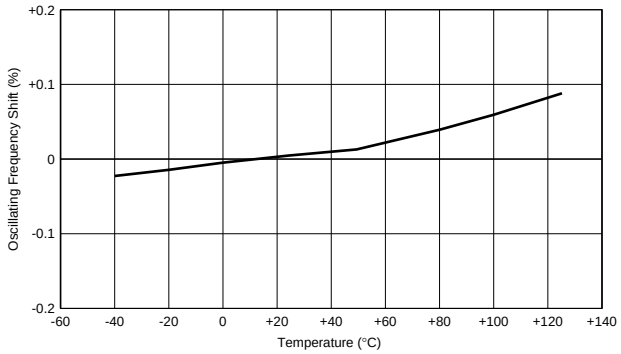

CSTCG_V

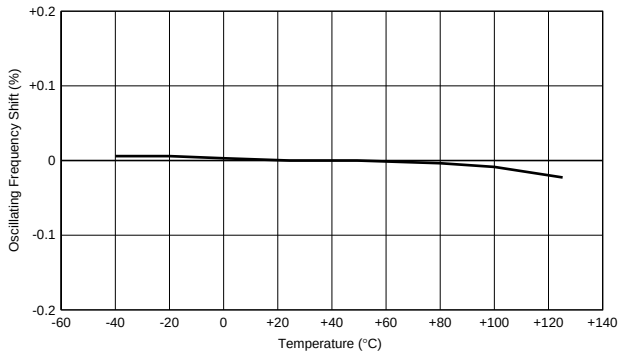

CSACW_X

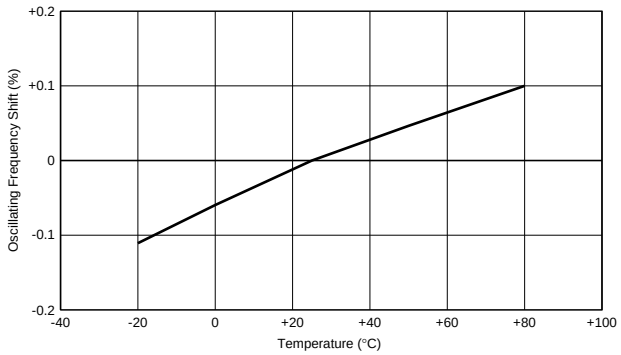

CSTCW_X

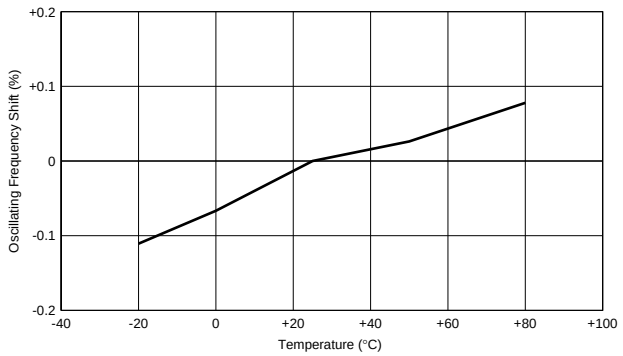

CSTCW_X_M

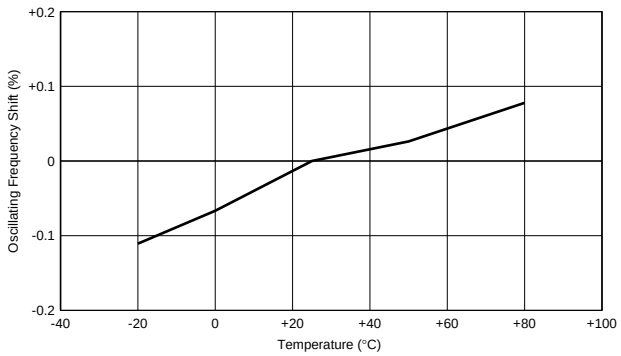

⚠Note • This PDF catalog is downloaded from the website of Murata Manufacturing co., ltd. Therefore, it's specifications are subject to change or our products in it may be discontinued without advance notice. Please check with our sales representatives or product engineers before ordering.
• This PDF catalog has only typical specifications because there is no space for detailed specifications. Therefore, please approve our product specifications or transact the approval sheet for product specifications before ordering.

Application Circuits Utilization

■ uPD78F0533GB (NEC Electronics)

8-bit Microcomputer

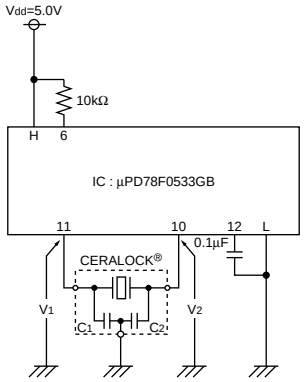

H: 15, 16, 47
L: 9, 13, 14, 48

CERALOCK®: CSTCR4M00G55-R0
C_1=39pF (Typ.)
C_2=39pF (Typ.)

■ M38235G6HP (Renesas)

8-bit Microcomputer

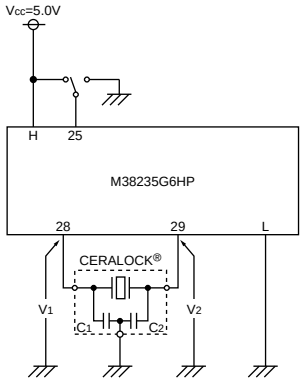

H: 71
L: 30, 73

CERALOCK®: CSTLS8M00G53-B0
C_1=15pF (Typ.)
C_2=15pF (Typ.)

■ TMP19A43FDXBG (Toshiba)

32-bit Microcomputer

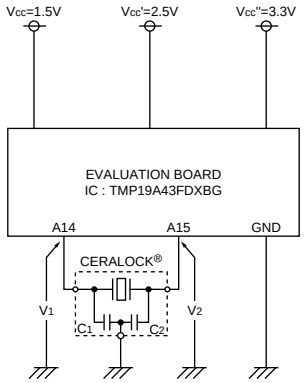

Xin: A14
Xout: A15

CERALOCK®: CSTCE10M0G52-R0
C_1=10pF (Typ.)
C_2=10pF (Typ.)

■ MN103SFC2D (Panasonic)

32-bit Microcomputer

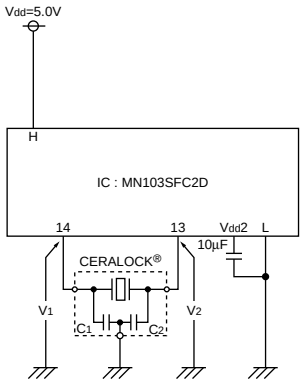

H: 9, 17, 34
L: 7, 15, 36
V_{dd2}: 16, 38

CERALOCK®: CSTCR5M00G55Z-R0
C_1=39pF (Typ.)
C_2=39pF (Typ.)

■ MB95F128H (Fujitsu)

8-bit Microcomputer

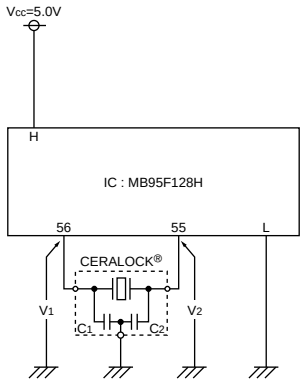

H: 3, 28, 51, 79
L: 4, 29, 54, 57

CERALOCK®: CSTCE8M00G52-R0
C_1=10pF (Typ.)
C_2=10pF (Typ.)

■ PIC16F716-I/SO (Microchip)

8-bit Microcomputer

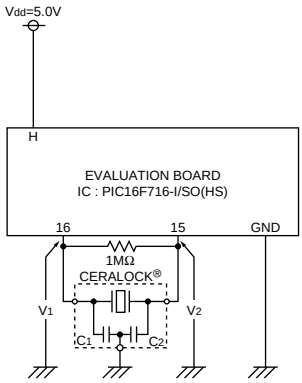

CERALOCK®: CSTCE12M0G52A-R0
C_1=10pF (Typ.)
C_2=10pF (Typ.)

Continued on the following page.

⚠Note • This PDF catalog is downloaded from the website of Murata Manufacturing co., ltd. Therefore, it's specifications are subject to change or our products in it may be discontinued without advance notice. Please check with our sales representatives or product engineers before ordering.
• This PDF catalog has only typical specifications because there is no space for detailed specifications. Therefore, please approve our product specifications or transact the approval sheet for product specifications before ordering.

Application Circuits Utilization

Continued from the preceding page.

■ HD64F36077GH (Renesas)

16-bit Microcomputer

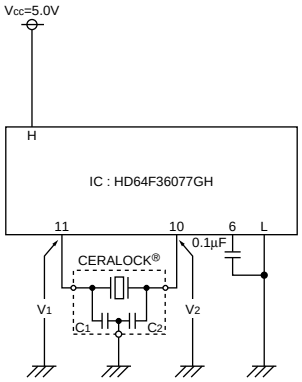

H: 3, 7, 12
L: 8, 9

CERALOCK®: CSTCE8M00G52-R0
C_1=10pF (Typ.)
C_2=10pF (Typ.)

■ LC87F5G32A (Sanyo)

8-bit Microcomputer

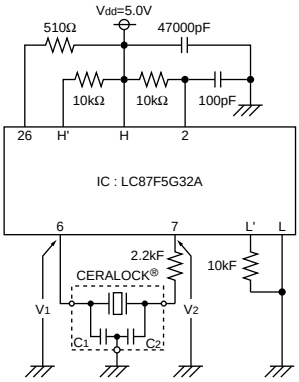

H: 8, 19, 39
L: 5, 20, 40
H': 29, 31, 35
L': 30, 32~34, 36

CERALOCK®: CSTLS5M00G53-B0
C_1=15pF (Typ.)
C_2=15pF (Typ.)

■ uPD70F3215HYGC (NEC Electronics)

32-bit Microcomputer

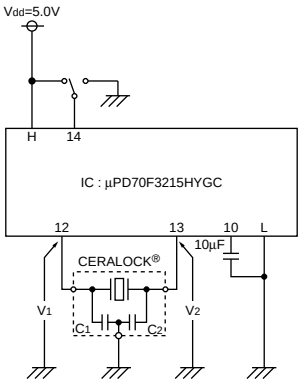

H: 1, 5, 9, 34, 70
L: 2, 8, 11, 33, 69

CERALOCK®: CSTCR5M00G55-R0
C_1=39pF (Typ.)
C_2=39pF (Typ.)

■ ATmega128 (Atmel)

8-bit Microcomputer

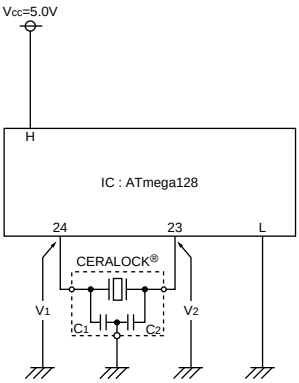

H: 21, 52, 64
L: 22, 53, 63

CERALOCK®: CSTCE8M00G52-R0
C_1=10pF (Typ.)
C_2=10pF (Typ.)

■ ST7FLITE29F2B6 (ST Microelectronics)

8-bit Microcomputer

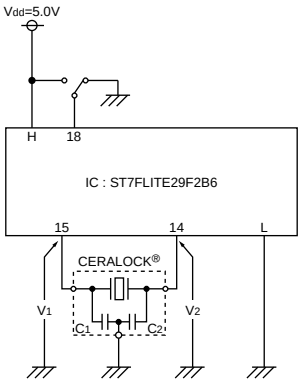

H: 17
L: 16

CERALOCK®: CSTCE16M0V53-R0
C_1=15pF (Typ.)
C_2=15pF (Typ.)

■ TMS320F2810PBKA (Texas Insturumets)

32-bit Microcomputer

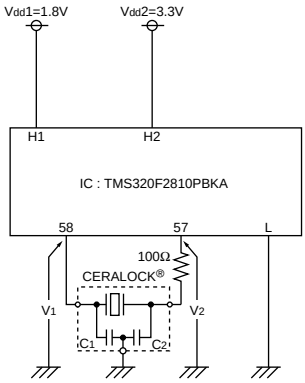

H1: 20, 29, 42, 56, 63, 74, 82, 94, 99, 100, 102, 110, 114
H2: 1, 13, 14, 25, 49, 52, 83, 104, 118
L: 12, 15, 17, 26, 30, 39, 53, 59, 62, 73, 88, 95, 103, 109, 115, 117, 128

CERALOCK®: CSTCE15M0V53-R0
C_1=15pF (Typ.)
C_2=15pF (Typ.)