THIS DRAWING IS UNPUBLISHED. RELEASED FOR PUBLICATION - ,- .
© COPYRIGHT - By - ALL RIGHTS RESERVED.

LOC	DIST
GP	00

REVISIONS

P	LTR	DESCRIPTION	DATE	DWN	APVD
	V2	REVISED PER ECO-11-004835	11MAR11	RK	HMR

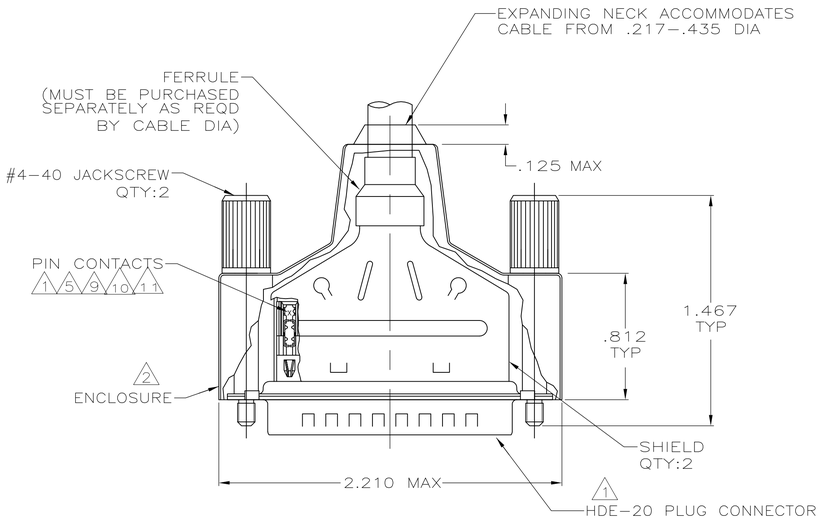

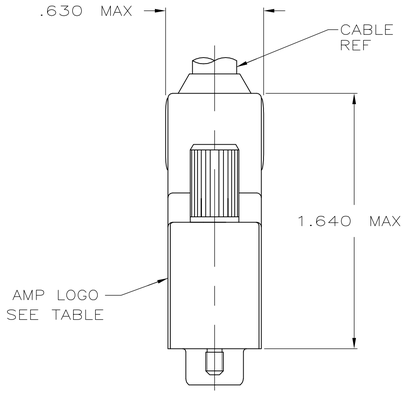

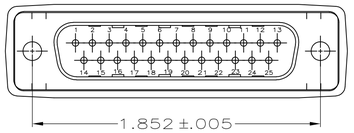

1. PLUG CONNECTOR FULLY LOADED WITH CONTACTS. ALL OTHER PARTS ARE SHIPPED UNASSEMBLED. EACH PART INDIVIDUALLY BULK PACKED.
2. FLAME RETARDANT 94V-0 RATED, POLYOLEFIN OR PVC, BLACK.
3. INSERT: FLAME RETARDANT 94V-0 RATED, GLASS-FILLED, NYLON OR POLYESTER, BLACK.
4. SHELLS & SHIELDS: STEEL PER ASTM A109.
5. CONTACTS: PHOSPHOR BRONZE PER QQ-B-750.
6. GOLD PLATING PER MIL-G-45204, NICKEL PLATING PER QQ-N-290, TIN PLATING PER MIL-T-10727, ZINC PLATING PER B633, TYPE II, CLASS SCI, BLACK CHROMATE.
7. SHELLS & SHIELDS: TIN PLATED.
8. JACKSCREWS: ZINC PHOSPHATE COATING, BLACK.
9. CONTACTS PLATED GOLD FLASH FOR A LENGTH OF .150 MIN FROM MATING END, .000100-.000200 BRIGHT TIN OR BRIGHT TIN-LEAD IN WIRE TERMINATION AREA, ALL OVER .000030 MIN NICKEL UNDERPLATE ON ENTIRE CONTACT.
10. PLATED WITH .000030 MIN GOLD FOR LENGTH OF .150 MIN FROM MATING END, WITH POINT OF MEASUREMENT .075 FROM MATING END OF CONTACT, .000100-.000200 TIN OR TIN LEAD ON TERMINATION END, ALL OVER .000050 MIN NICKEL ON ENTIRE CONTACT.
11. NUMBER ON CONTACT INDICATES WIRE RANGE.
12. OBSOLETE PART NUMBER.
13. JACKSCREWS: ZINC ALLOY.
14. CONTACTS GOLD PLATED FOR A LENGTH OF .150 MIN FROM MATING END, .000030 MIN GOLD IN MATED AREA, .000100-.000200 MATTE TIN IN WIRE TERMINATION AREA, ALL OVER .000050 MIN NICKEL UNDERPLATE ON ENTIRE CONTACT.
    OR
    CONTACTS GOLD PLATED FOR A LENGTH OF .150 MIN FROM MATING END, GOLD FLASH OVER PALLADIUM-NICKEL, .000030 MIN TOTAL IN MATED AREA, .000100-.000200 MATTE TIN IN WIRE TERMINATION AREA, ALL OVER .000050 MIN NICKEL UNDERPLATE ON ENTIRE CONTACT.
15. CONTACTS PLATED GOLD FLASH FOR A LENGTH OF .150 MIN FROM MATING END, .000100-.000200 MATTE TIN IN WIRE TERMINATION AREA, ALL OVER .000030 MIN NICKEL UNDERPLATE ON ENTIRE CONTACT.
16. OBSOLETE PARTS: OBSOLETE CIS STREAMLINING PER D.RENAUD/D.SINISI

	CONTACT FINISH	LOGO	11	WIRE RANGE	PART NUMBER
16 OBSOLETE	15	YES	3	20-22	~~1-747948-9~~
	15	YES	2	22-26	1-747948-8
	15	YES	1	26-30	12 1-747948-7
	14	YES	2	22-26	1-747948-6
	14	YES	1	26-30	1-747948-5
	9	NO	3	20-22	12 1-747948-2
		NO	2	22-26	12 1-747948-1
		NO	1	26-30	12 1-747948-0
	10	NO	3	20-22	12 747948-9
		NO	2	22-26	12 747948-8
		NO	1	26-30	12 747948-7
SUPERCEDED	9	YES	3	20-22	~~747948-6~~
SUPERCEDED BY1-747948-8		YES	2	22-26	~~747948-5~~
		YES	1	26-30	12 747948-4
	10	YES	3	20-22	12 747948-3
SUPERCEDED BY1-747948-6		YES	2	22-26	~~747948-2~~
SUPERCEDED BY1-747948-5		YES	1	26-30	~~747948-1~~

THIS DRAWING IS A CONTROLLED DOCUMENT.

DIMENSIONS: INCHES

TOLERANCES UNLESS OTHERWISE SPECIFIED:
0 PLC ± -
1 PLC ± -
2 PLC ± -
3 PLC ± .020
4 PLC ± -
ANGLES ± -

MATERIAL 3 4 5 13

FINISH CONTACTS: SEE TABLE 6 7 8

DWN 11-17-04 L. VARELA - DOCKS
CHK 11-17-04 J. GERACE
APVD 11-17-04 M. WALMSLEY
PRODUCT SPEC 108-40011 & 108-40030
APPLICATION SPEC 114-40002
WEIGHT -

TE Connectivity

NAME SHIELDING ENCLOSURE KIT, PLUG, SIZE 3, 25 POSN, AMPLIMITE HDE-20

SIZE	CAGE CODE	DRAWING NO	RESTRICTED TO
A1	00779	C-747948	-

CUSTOMER DRAWING | SCALE 2:1 | SHEET 1 OF 1 | REV V2

4805 (3/11)