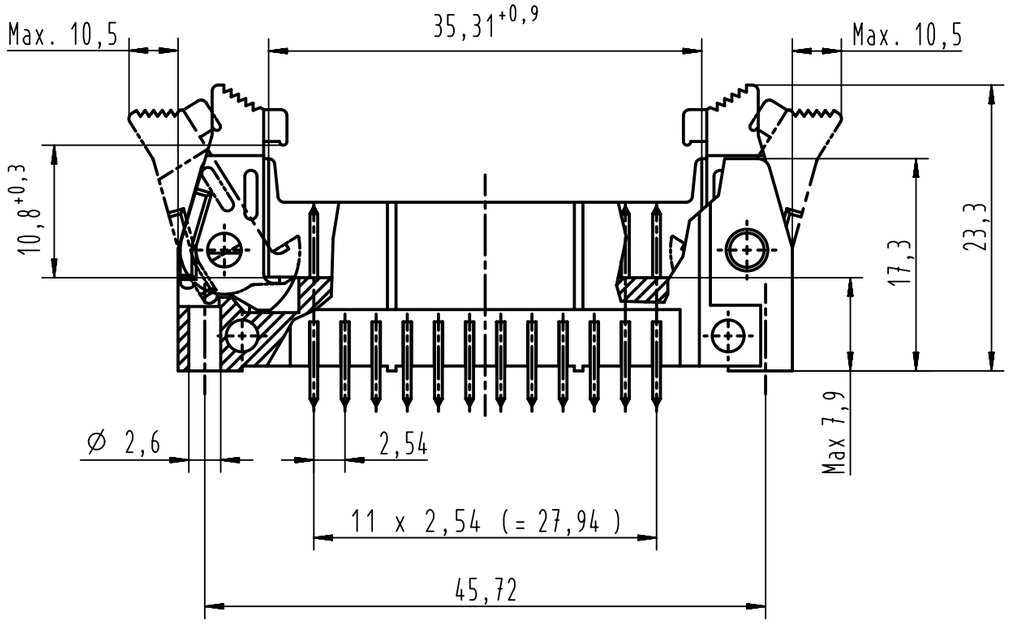

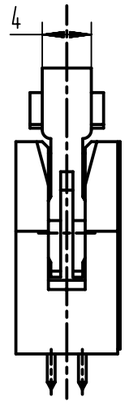

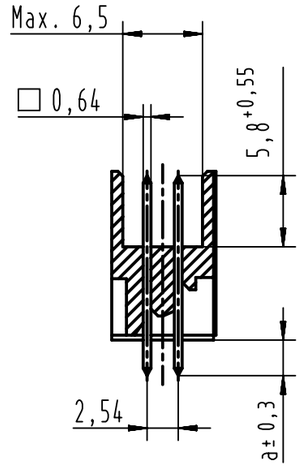

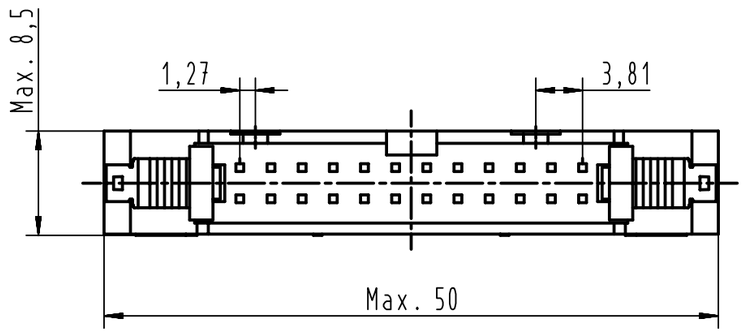

PCB layout, component side

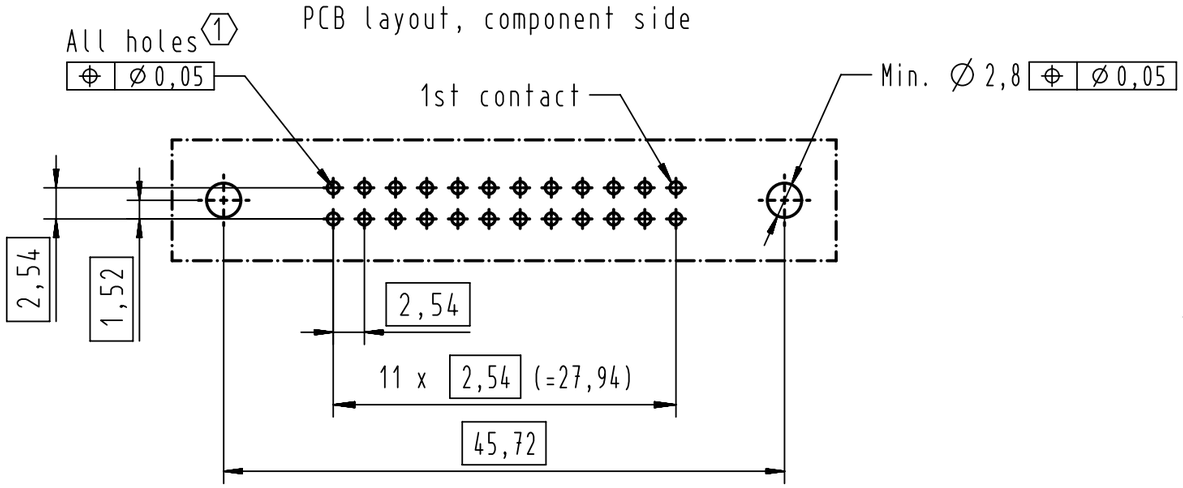

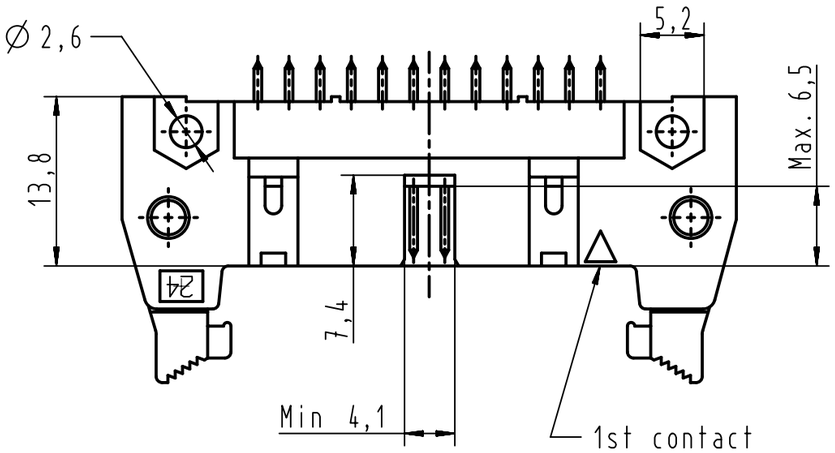

1 Solder pins for PCB connections Ø 1± 0,1 according to IEC 60 326-3

09 18 524 7914 001	3	2,9	black insulator
09 18 524 6914 001	2	2,9	black insulator
09 18 524 5914 001	0,76µm Au or equivalent PdNi	2,9	black insulator
09 18 524 7914	3	2,9	standard insulator color
09 18 524 6914	2	2,9	standard insulator color
09 18 524 5914	0,76µm Au or equivalent PdNi	2,9	standard insulator color
Part number	**Performance level**	**a**	**Index designation**

All Dimensions in mm
Original Size DIN A3

Scale 2:1 | Free size tol. | Ref. | Sub.

All rights reserved

Department EC PD - FR

HARTING Electronics GmbH
D-32339 Espelkamp

Created by	Inspected by	Standardisation	Date	State
HUCBOURG	BAGDIKIAN	HOFFMANN	2013-01-31	Final Release

Title: SEK male STD 24P straight pins-short LL

Doc-Key / ECM-Nr.: 100528594/UGD/001/A 500000058744

Type: TB | Number: 0918524X914 | Rev.: A | Page: 1/1

A3