FC8J3304

Silicon N-channel MOS FET

For DC-DC converter circuits

■ Overview

FC8J3304 is N-channel dual type small signal MOS FET employed small size surface mounting package.

■ Features

- Low drain-source ON resistance: $R_{DS(on)}$ typ. = 32 mΩ (V_{GS} = 10 V)
- High-speed switching: Q_g = 2.8 nC
- Small size surface mounting package: WMini8-F1
- Contributes to miniaturization of sets, mount area reduction
- Eco-friendly Halogen-free package

■ Packaging

Embossed type (Thermo-compression sealing): 3000 pcs / reel (standard)

■ Absolute Maximum Ratings T_a = 25°C

Parameter		Symbol	Rating	Unit
Drain-source surrender voltage		V_{DSS}	33	V
Gate-source surrender voltage		V_{GSS}	±20	V
Drain current *1		I_D	5	A
	t = 10 s		5.5	
Peak drain current *1, 2		I_{DP}	20	A
Souce current (Body diode)		I_S (BD)	5	A
Power dissipation *1		P_D	1	W
	t = 10 s		1.3	
Channel temperature		T_{ch}	150	°C
Storage temperature		T_{stg}	–55 to +150	°C

Note) *1: Mounted on a glass epoxy PC board: 25.4 mm × 25.4 mm × 0.8 mm
*2: Pulse measurement: Channel temperature not to exceed 150°C

■ Package

- Code
  WMini8-F1
- Pin Name

1: Source	5: Drain
2: Gate	6: Drain
3: Source	7: Drain
4: Gate	8: Drain

■ Marking Symbol: 7A

■ Internal Connection

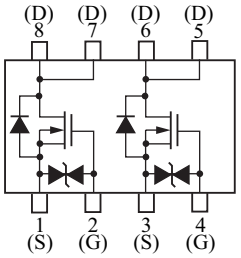

■ Electrical Characteristics $T_a = 25°C \pm 3°C$

Parameter	Symbol	Conditions	Min	Typ	Max	Unit
Drain-source surrender voltage	V_{DSS}	$I_D = 1$ mA, $V_{GS} = 0$ V	33			V
Drain-source cutoff current	I_{DSS}	$V_{DS} = 33$ V, $V_{GS} = 0$ V			1	μA
Gate-source cutoff current	I_{GSS}	$V_{GS} = \pm 16$ V, $V_{DS} = 0$ V			±10	μA
Gate threshold voltage	V_{TH}	$I_D = 0.26$ mA, $V_{DS} = 10$ V	1		2.5	V
Drain-source ON resistance *1	$R_{DS(on)}$	$I_D = 2.5$ A, $V_{GS} = 10$ V		32	38	mΩ
		$I_D = 2.5$ A, $V_{GS} = 4.5$ V		48	68	
Short-circuit input capacitance (Common source)	C_{iss}	$V_{DS} = 10$ V, $V_{GS} = 0$ V, f = 1 MHz		220		pF
Short-circuit output capacitance (Common source)	C_{oss}			40		pF
Reverse transfer capacitance (Common source)	C_{rss}			35		pF
Turn-on delay time *2	$t_{d(on)}$	$V_{DD} = 15$ V, $V_{GS} = 0$ V to 10 V, $I_D = 2.5$ A		7		ns
Rise time *2	t_r			3		ns
Turn-off delay time *2	$t_{d(off)}$	$V_{DD} = 15$ V, $V_{GS} = 10$ V to 0 V, $I_D = 2.5$ A		15		ns
Fall time *2	t_f			9		ns
Gate charge load	Q_g	$V_{DD} = 15$ V, $V_{GS} = 0$ V to 4.5 V, $I_D = 5$ A		2.8		nC
Gate-source charge	Q_{gs}			1.1		nC
Gate-drain charge	Q_{gd}			1.2		nC
Body diode characteristics						
Drain-source voltage *1	V_{SD}	$I_S = 2.5$ A, $V_{GS} = 0$ V		0.8	1.2	V

Note) 1. Measuring methods are based on JAPANESE INDUSTRIAL STANDARD JIS C 7030 measuring methods for transistors.
2. *1: Pulse measurement: Channel temperature not to exceed 150°C
*2: Measurement circuit

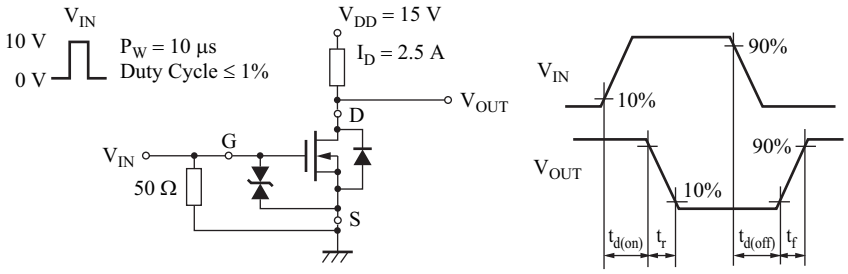

WMini8-F1

Unit: mm

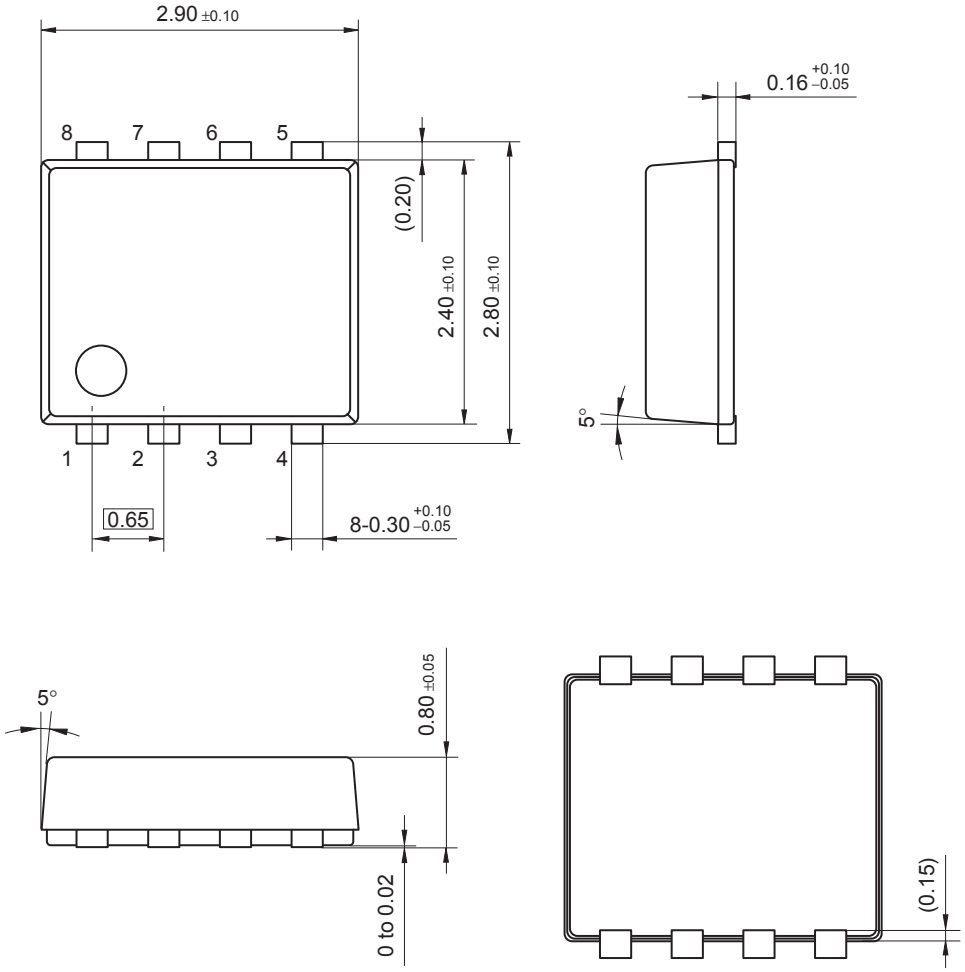

Request for your special attention and precautions in using the technical information and semiconductors described in this book

(1) If any of the products or technical information described in this book is to be exported or provided to non-residents, the laws and regulations of the exporting country, especially, those with regard to security export control, must be observed.

(2) The technical information described in this book is intended only to show the main characteristics and application circuit examples of the products. No license is granted in and to any intellectual property right or other right owned by Panasonic Corporation or any other company. Therefore, no responsibility is assumed by our company as to the infringement upon any such right owned by any other company which may arise as a result of the use of technical information described in this book.

(3) The products described in this book are intended to be used for general applications (such as office equipment, communications equipment, measuring instruments and household appliances), or for specific applications as expressly stated in this book.
Consult our sales staff in advance for information on the following applications:
・Special applications (such as for airplanes, aerospace, automotive equipment, traffic signaling equipment, combustion equipment, life support systems and safety devices) in which exceptional quality and reliability are required, or if the failure or malfunction of the products may directly jeopardize life or harm the human body.
It is to be understood that our company shall not be held responsible for any damage incurred as a result of or in connection with your using the products described in this book for any special application, unless our company agrees to your using the products in this book for any special application.

(4) The products and product specifications described in this book are subject to change without notice for modification and/or improvement. At the final stage of your design, purchasing, or use of the products, therefore, ask for the most up-to-date Product Standards in advance to make sure that the latest specifications satisfy your requirements.

(5) When designing your equipment, comply with the range of absolute maximum rating and the guaranteed operating conditions (operating power supply voltage and operating environment etc.). Especially, please be careful not to exceed the range of absolute maximum rating on the transient state, such as power-on, power-off and mode-switching. Otherwise, we will not be liable for any defect which may arise later in your equipment.
Even when the products are used within the guaranteed values, take into the consideration of incidence of break down and failure mode, possible to occur to semiconductor products. Measures on the systems such as redundant design, arresting the spread of fire or preventing glitch are recommended in order to prevent physical injury, fire, social damages, for example, by using the products.

(6) Comply with the instructions for use in order to prevent breakdown and characteristics change due to external factors (ESD, EOS, thermal stress and mechanical stress) at the time of handling, mounting or at customer's process. When using products for which damp-proof packing is required, satisfy the conditions, such as shelf life and the elapsed time since first opening the packages.

(7) This book may be not reprinted or reproduced whether wholly or partially, without the prior written permission of our company.

20100202