# MICRO-CHANGE '8R' SERIES MALE/MALE RECEPTACLE - PG9

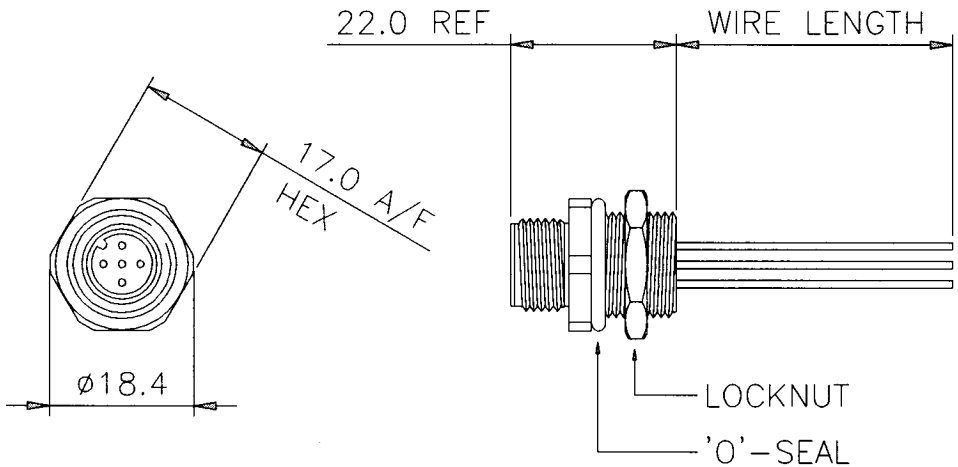


**4 WIRE**

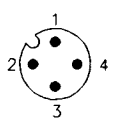


| Pin No. | Wire |
|---|---|
| 1 | Brown |
| 2 | White |
| 3 | Blue |
| 4 | Black |

**5 WIRE**

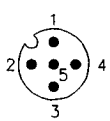


| Pin No. | Wire |
|---|---|
| 1 | Brown |
| 2 | White |
| 3 | Blue |
| 4 | Black |
| 5 | Grey |

## PART No MATRIX

| 8 | 0 | X | J | 3 | 6 | X | X | X | X | X | X | X | X |
|---|---|---|---|---|---|---|---|---|---|---|---|---|---|
| | | | | | | | | | | | | | OPTIONS |

- 8: 8=Micro Change
- 0: R=Receptacle
- X: 4=4 Core, 5=5 Core
- J36: J36 = Male/Male PG9 (Long)
- X X X: See table of cable types
- X: C=Centimetres, M=Metres, F=Feet
- X X X: LENGTH 020=2 METRES, 050=5 METRES, 200=20 METRES
- X (OPTIONS): Shell Material 3=Nickel plated Brass (Standard), 1=Stainless Steel, 5=Delrin

BRADHARRISON® From Aero-Motive (UK) Limited

Part No 8RXJ36XXXXXX

AERO-MOTIVE(UK)LTD
FACTORY 9 RASSAU IND. EST.
EBBW VALE GWENT NP35SD

THIS DRAWING CONTAINS INFORMATION THAT IS PROPRIETARY TO AERO-MOTIVE (UK) LTD. AND NOT BE USED WITHOUT WRITTEN PERMISSION.

| DRAWN | T.Davies |
|---|---|
| DATE | 24/9/97 |
| REV. | A |