# CN-SCP-005GTN

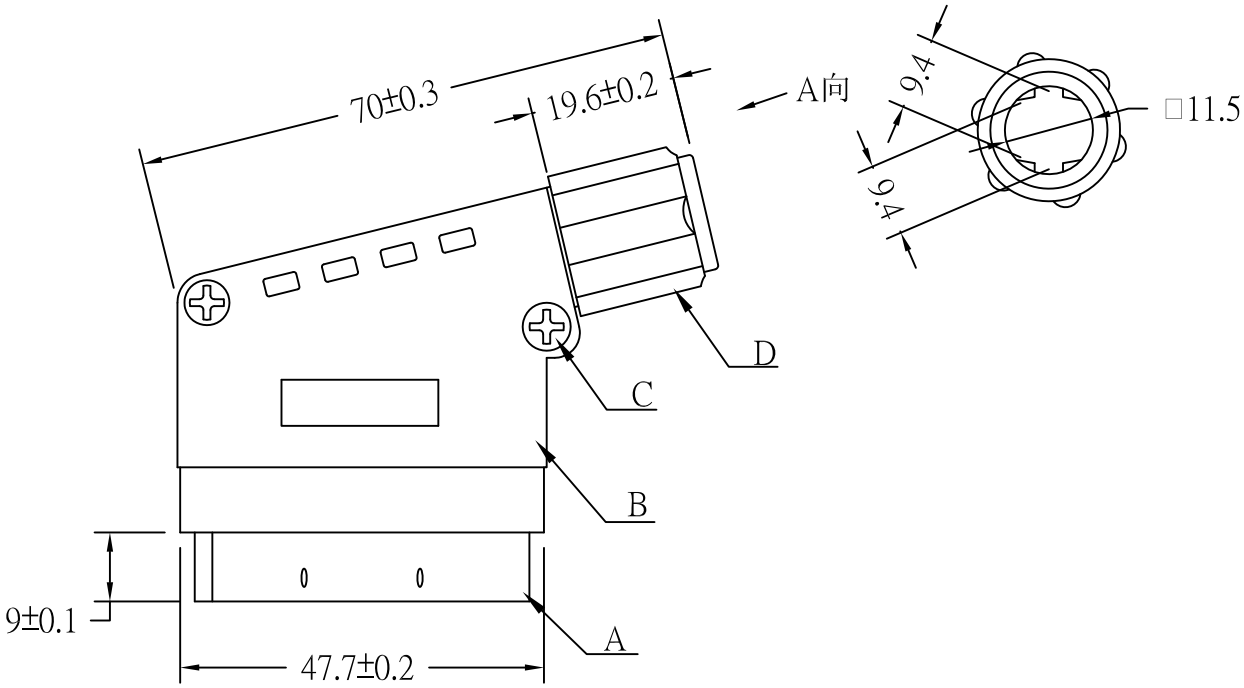


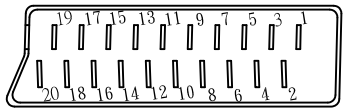


SCART

TITLE: SCART 21PIN PLUG

Unless Specified,otherwise tolerance are +/-0.1mm; Remark:ROHS Requirement Applied(符合ROHS)

| NO | Description | Unit | Materials | Finish/Color | PART NO. |
|---|---|---|---|---|---|
| A. | IRON CASING | 1 | IRON | GOLD | |
| B. | SHELL | 1 | ZINC | TN/NI | |
| C. | WHORL NAIL | 2 | IRON | | |
| D. | WHORL CAP | 1 | ZINC | TN/NI | |
| E. | | | | | |

| REV | DESCRIPTION | Issue | B | DATE: | 2008/1/31 |
|---|---|---|---|---|---|
| 1 | 增加尺寸标注 | | | DATE: | 2009/2/6 |
| 2 | | | | DATE: | |
| 3 | | | | DATE: | |

| | |
|---|---|
| Approved | |
| Check | |
| Drawn | 李傑 |
| Unit | mm |
| Scale | 1:1 |