Sensor/actuator box header - SACB-6/12-L-C GG SCO P - 1452893

Please be informed that the data shown in this PDF Document is generated from our Online Catalog. Please find the complete data in the user's documentation. Our General Terms of Use for Downloads are valid
(http://download.phoenixcontact.com)

Sensor/actuator box header, Connection method: M12-SPEEDCON-socket Plastic, Number of slots: 6, Number of positions: 5, Slot assignment: Double, Status indication: Yes, pnp; Master cable connection: Pluggable screw connection, Shielding: No

Key commercial data

Packing unit	1 pc
GTIN	4 046356 553759
Weight per Piece (excluding packing)	154.0 g
Custom tariff number	85444290
Country of origin	Germany

Technical data

General

Rated voltage	24 V DC
Max. operating voltage U_{max}	30 V DC
Current carrying capacity per I/O signal	2 A
Current carrying capacity per slot	4 A
Total rated current	10 A
Number of positions	5
Number of slots	6
Inflammability class according to UL 94	V0
Sensor/actuator connection system	M12-SPEEDCON-socket

Ambient conditions

Degree of protection	IP65
	IP67
Ambient temperature (operation)	-25 °C ... 80 °C

Local diagnostics function

Local diagnostics	Supply voltage Green LED

Sensor/actuator box header - SACB-6/12-L-C GG SCO P - 1452893

Technical data

Local diagnostics function

	Status display I/O Yellow LED

Master cable data/connection data

Connection method	Pluggable screw connection
Tightening torque slot sensor/actuator cable	0.4 Nm
Tightening torque of mounting screw for fixing the housing	0.5 Nm

Insulation material

Housing material	PBT
Material of the moulding mass	PUR
Contact material	Cu alloy
Contact surface material	Gold-plated
Contact carrier material	PA
Material of contact, master cable side	CU alloy
Material of contact surface, master cable side	Sn
Material of the contact carrier on the master cable side	PA
Material of threaded sleeve	PBT
Material, O-ring	NBR
Sealing material	NBR (Connector hood)

Pin assignment

Slot/position = Wire color or connection	1 / 4 (A) = WH
	1 / 2 (B) = GY/PK
	2 / 4 (A) = GN
	2 / 2 (B) = RD/BU
	3 / 4 (A) = YE
	3 / 2 (B) = WH/GN
	4 / 4 (A) = GY
	4 / 2 (B) = BN/GN
	5 / 4 (A) = PK
	5 / 2 (B) = WH/YE
	6 / 4 (A) = RD
	6 / 2 (B) = YE/BN
	1-4 / 1 (+ 24 V) = BN
	1-6 / 3 (0 V) = BU
	1-6 / 5 (PE) = GN/YE

Classifications

eCl@ss

eCl@ss 4.0	27140815
eCl@ss 4.1	27140815

Sensor/actuator box header - SACB-6/12-L-C GG SCO P - 1452893

Classifications

eCl@ss

eCl@ss 5.0	27143423
eCl@ss 5.1	27143423
eCl@ss 6.0	27143423
eCl@ss 7.0	27449001
eCl@ss 8.0	27449001

ETIM

ETIM 4.0	EC002585
ETIM 5.0	EC002585

UNSPSC

UNSPSC 6.01	31261501
UNSPSC 7.0901	31261501
UNSPSC 11	31261501
UNSPSC 12.01	31261501
UNSPSC 13.2	31261501

Approvals

Approvals

Approvals

UL Recognized / cUL Recognized / GOST / cULus Recognized

Ex Approvals

Approvals submitted

Approval details

UL Recognized

Nominal voltage UN	24 V

Sensor/actuator box header - SACB-6/12-L-C GG SCO P - 1452893

Approvals

cUL Recognized

Nominal voltage UN	24 V

GOST

cULus Recognized

Accessories

Accessories

Connector hood with master cable

Connector hood - SACB-C-H180-6/12- 5,0PUR SCO P - 1453148

Connector hood, For use in Sensor/actuator box, Connection method: M12-SPEEDCON-socket Plastic, Number of slots: 6, Slot assignment: Double, Status indication: No; Master cable connection: Pluggable screw connection 180°, PUR/PVC, Cable length: 5 m, Shielding: No

Connector hood - SACB-C-H180-6/12-10,0PUR SCO P - 1453151

Connector hood, For use in Sensor/actuator box, Connection method: M12-SPEEDCON-socket Plastic, Number of slots: 6, Slot assignment: Double, Status indication: No; Master cable connection: Pluggable screw connection 180°, PUR/PVC, Cable length: 10 m, Shielding: No

Connector hood - SACB-C-H180-6/12 SCO P PUR/ - 1401413

Connector hood, For use in Sensor/actuator box, Connection method: M12-SPEEDCON-socket Plastic, Number of slots: 6, Slot assignment: Double, Status indication: No; Master cable connection: Pluggable screw connection 180°, PUR/PVC, Cable length: 0.5 m ... 50 m, Shielding: No

Connector hood without master cable

Sensor/actuator box header - SACB-6/12-L-C GG SCO P - 1452893

Accessories

Connector hood - SACB-C-H180-8/16 SCO P - 1453229

Connector hood with integrated connector, for M12 sensor/actuator boxes with SPEEDCON plastic thread and plug-in screw connection, for 4, 6 or 8 slots

---

Device marking

Contactor marker – zack marker strip - SS-ZB 17,5 WH - 0804963

Contactor marker – zack marker strip, Strip, white, Unlabeled, Can be labeled with: Plotter, Mounting type: Snap into flat marker groove, Lettering field: 17.5 x 8 mm

---

Contactor marker – zack marker strip - SS-ZB 17,5 YE - 0804976

Contactor marker – zack marker strip, Strip, yellow, Unlabeled, Can be labeled with: Plotter, Mounting type: Snap into flat marker groove, Lettering field: 17.5 x 8 mm

---

Labeled device marker

Contactor marker – zack marker strip - SS-ZB 17,5 WH CUS - 0824468

Contactor marker – zack marker strip, Can be ordered: Strip, white, Labeled according to customer specifications, Mounting type: Snap into flat marker groove, Lettering field: 17.5 x 8 mm

---

Contactor marker – zack marker strip - SS-ZB 17,5 YE CUS - 0824469

Contactor marker – zack marker strip, Can be ordered: Strip, yellow, Labeled according to customer specifications, Mounting type: Snap into flat marker groove, Lettering field: 17.5 x 8 mm

---

Protective cap

Sensor/actuator box header - SACB-6/12-L-C GG SCO P - 1452893

Accessories

Screw plug - PROT-MS SCO - 1553129

M12 screw plug with SPEEDCON quick locking for unoccupied M12 sockets of the sensor/actuator cables, boxes and flush-type connectors

---

Screwdriver tools

Tool - SACC BIT M12-D20 - 1208445

Nut for assembling SACC M12 connectors for free assembly, excluding M12 connectors with QUICKON fast connection technology, for 4 mm hexagonal drive

---

Philips screwdriver - SZK PZ2 VDE - 1206463

Screwdriver, PZ crosshead, VDE insulated, size: PZ 2 x 100 mm, 2-component grip, with non-slip grip

---

Torque tool

Torque screwdriver - TSD 04 SAC - 1208429

Torque screwdriver, with preset torque of 0.4 Nm and 4 mm hexagonal drive for M12 connectors

---

Torque screwdriver - TSD-M 1,2NM - 1212224

Torque screw driver, accuracy as per EN ISO 6789 standard, adjustable from 0.3 - 1.2 Nm

---

Drawings

Sensor/actuator box header - SACB-6/12-L-C GG SCO P - 1452893

Schematic diagram

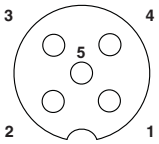

M12 slot, socket, 5-pos.

Circuit diagram

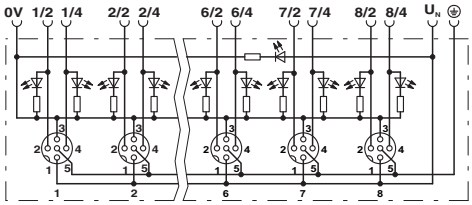

Dimensioned drawing

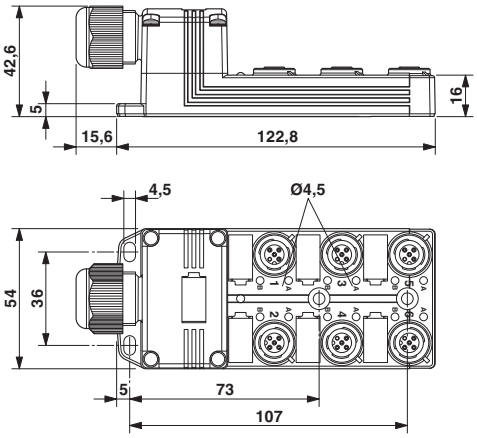

Phoenix Contact 2014 © - all rights reserved
http://www.phoenixcontact.com