SIEMENS

Product data sheet 3SB3501-0DA01

22MM METAL ROUND ACTUATOR: ILLUMINATED PUSHBUTTON LATCHING,
UNLOCKING BY PRESSING AGAIN WITH FLAT BUTTON ILLUMINABLE INCL. HOLDER FOR 3 ELEMENTS WITH HOLDER AMBER

Actuator / signaling device:		
Design of the product		Single device round
Design of the operating mechanism		Illuminated pushbutton
External diameter / of the activation element	mm	28.5
Type of unlocking device		push-to-unlatch mechanism
Color / of the activation element		Amber
Material / of the activation element		plastic
Shape / of the activation element		Flat pushbutton
Number of switching positions		2
Product component / front ring		Yes
Material / of the front ring		metal
Color / of the front ring		silver
Design of front ring		Standard
Product function / EMERGENCY STOP function		No

General technical details:		
Resistance against shock		
• for devices with incandescent lamp / according to IEC 60068-2-27		<= 30g
• for devices without incandescent lamp / according to IEC 60068-2-27		<= 50g

subject to modifications
© Copyright Siemens AG 2012

Resistance against vibration / according to IEC 60068-2-6		20 ... 200 Hz: 5g
Operating cycles / maximum	1/h	1,000
Mechanical operating cycles as operating time / typical		3,000,000
Product extension / optional / fluorescent materials		Yes
Item designation		
• according to DIN EN 61346-2		S
• according to DIN 40719 extendable after IEC 204-2 / according to IEC 750		S
Tightening torque / of the screws in the bracket / maximum	N·m	1
Ambient temperature		
• during operating	°C	-25 … +70
• during storage	°C	-40 … +80
Protection class IP		IP67
climatic class / during the operating phase / according to EN 60721		3K6
Type of mounting		front mounting
Shape / of the installation hole		round
Installation width	mm	28.5
Mounting diameter	mm	22
Mounting height	mm	14.5
Mounting depth	mm	29

Certificates/approvals:

General Product Approval			Test Certificates
CSA	GOST	UL	Special Test Certificate

Shipping Approval					
ABS	BUREAU VERITAS	DNV	LRS	PRS	RINA

other		
Confirmation	other	UL

Further information:

Information- and Downloadcenter (Catalogs, Brochures,…)
http://www.siemens.com/industrial-controls/catalogs

Industry Mall (Online ordering system)
http://www.siemens.com/industrial-controls/mall

© Copyright Siemens AG 2012

Cax online generator:
http://www.siemens.com/cax

Service&Support (Manuals, Certificates, Characteristics, FAQs,...)
http://support.automation.siemens.com/WW/view/en/3SB3501-0DA01/all

Image database (product images, 2D dimension drawings, 3D models, device circuit diagrams, ...)
http://www.automation.siemens.com/bilddb/cax_en.aspx?mlfb=3SB3501-0DA01

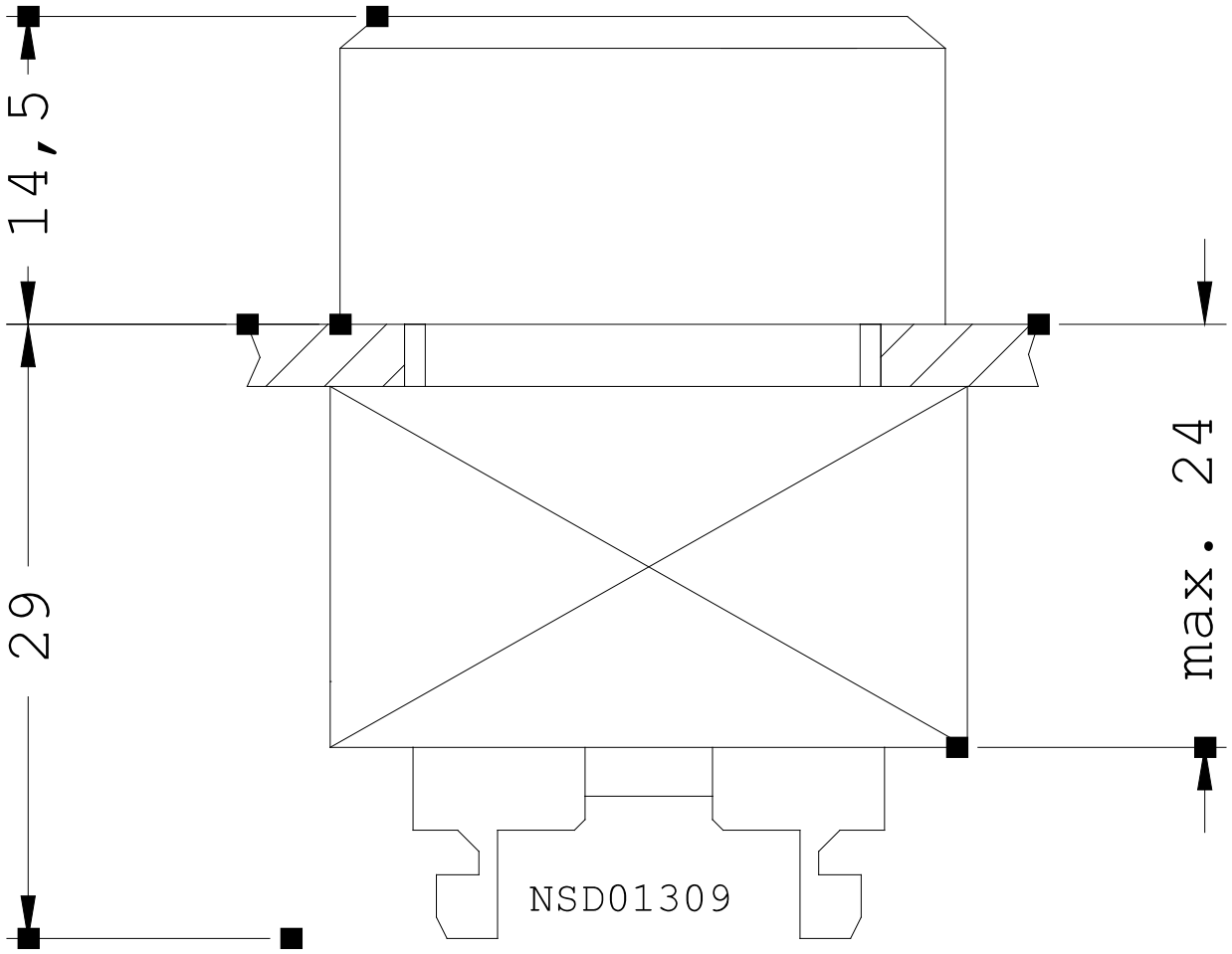

last change: Jul 17, 2012

© Copyright Siemens AG 2012