Alle Rechte vorbehalten/ *All rights reserved*

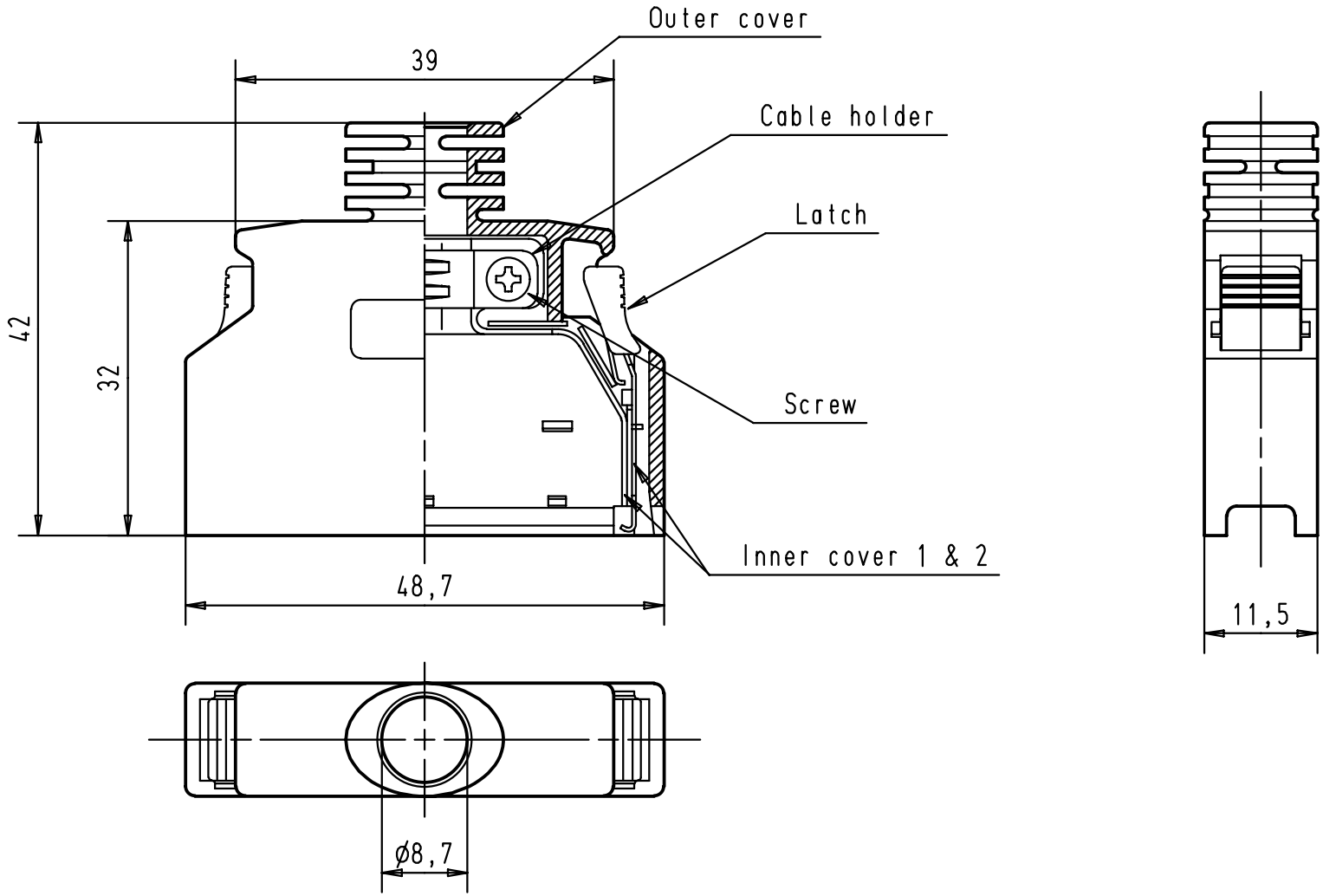

				Dat.	Name		
			Detail.	27 JUL 01	S G	All Dim. in mm Orig. Size DIN A 4	
			Insp.				
			Stand.				
29704	27 JUL 01	S G	HARTING EURL F-95972 Paris				
Mod.	Dat.	Name					

har.mik® I/O pin/socket
50 poles platic hood with metal insert for IDC male bellow connector

Maßstab/ *Scale* 1,5:1

TB 60 13 050 0153

Sub.

Blatt/ *Page* 1/1