# HellermannTyton

DATA SHEET **NFP**: Spiral Binding

## DESCRIPTION

Spiral Binding is a continuous spiral, which is cut from a tube. It has many uses for protecting and bundling wires, cables and tubes in a range of environments.
Spiral Binding is available in a range of materials to suit many applications.

## APPLICATION

Spiral Binding is a versatile form of protection as it can be fitted to cables “in situ”. It also enables cables to be broken out at any point whilst creating a homogeneous harness assembly which can follow any route. Polyethylene spiral binding provides a low cost solution for general-purpose applications.

## PROPERTIES

| Properties | Typical Results | Test Method |
|---|---|---|
| Material | Polyethylene | |
| Continuous Operating Temp | -60$^{O}$C to +90$^{O}$C | IEC 216 |
| Intermittent Temp | +120$^{O}$C | |
| Halogen Content | Halogen Free | |
| Colours | Standard Resistor Colour Code and Fluorescent (to order) | |

## STANDARDS

Approved to: N/A
Conforms to: N/A



**Plymouth International Medical & Technology Park**,
William Prance Road, Plymouth, Devon PL6 5WR, England
Telephone: +44 (0) 1752 701261; Fax: +44 (0) 1752 790058

# HellermannTyton

DATA SHEET **NFP**: Spiral Binding

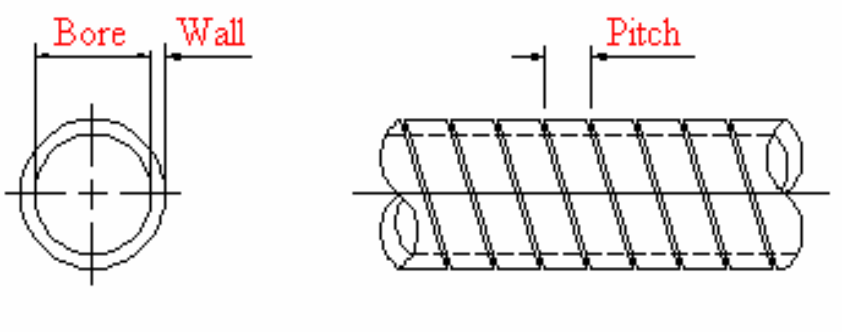


DIMENSIONS

| REF. | NOMINAL (MM) | | | |
|---|---|---|---|---|
| | BORE | WALL | PITCH | RECOMMENDED LOOM SIZE* |
| 1NFP | 1.6 | 0.8 | 6.0 | 1.6 – 12.0 |
| 2NFP | 4.1 | 1.0 | 9.5 | 4.2 – 50.0 |
| 3NFP | 9.6 | 1.2 | 13.5 | 9.5 – 101.0 |
| 4NFP | 13.7 | 1.3 | 16.0 | 13.2 – 130.0 |
| 6NFP | 19.5 | 1.6 | 18.0 | 22.7 – 180.0 |

* Based on our general experience, the product will provide protection and binding for a harness at the lower end of the loom size-range, but can only be recommended for binding at the upper end of the loom size-range.



**Plymouth International Medical & Technology Park**,
William Prance Road, Plymouth, Devon PL6 5WR, England
Telephone: +44 (0) 1752 701261; Fax: +44 (0) 1752 790058