©THIS DRAWING IS THE PROPERTY OF SAIA-BURGESS GATESHEAD AND MUST NOT BE USED OR COPIED, ENTIRELY OR IN PART, WITHOUT THE PERMISSION OF SAIA-BURGESS GATESHEAD.©

Drg No :- C 44606

SPECIFICATION

ACTUATING FORCE:-5.0N(18ozf)MAX

RELEASE FORCE :- 1.7N(6.0ozf)MIN

FREE POSITION :- 31.0 (1.22) MAX

OPERATING POSITION:- $28.6^{+1.5}$ (1.13)

MOVEMENT DIFFERENTIAL :-0.4 (0.016)MAX

OVERTRAVEL (AVAILABLE) :- 4.6(0.18)

SPECIAL FEATURE :-
TESTED AND STAMPED TO UL AND CSA REQUIREMENTS

APPROVAL RATING :-
15AMP - 250 V.A.C.
1/3HP - 125 OR 250 V.A.C.

DIAGRAM OF CONNECTIONS

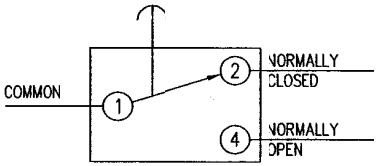

INSTALLATION DRAWING

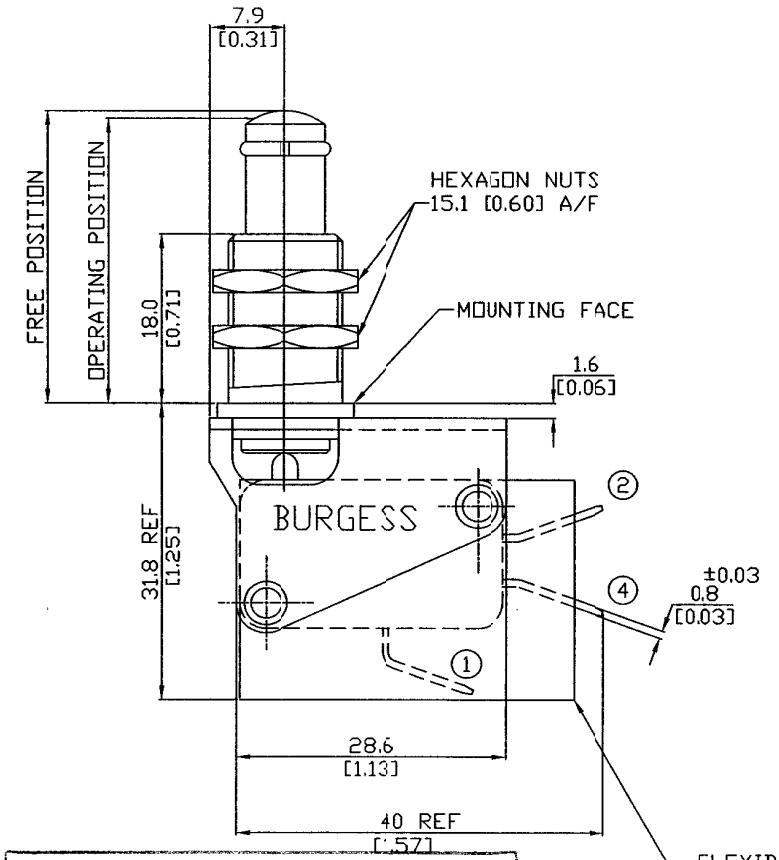

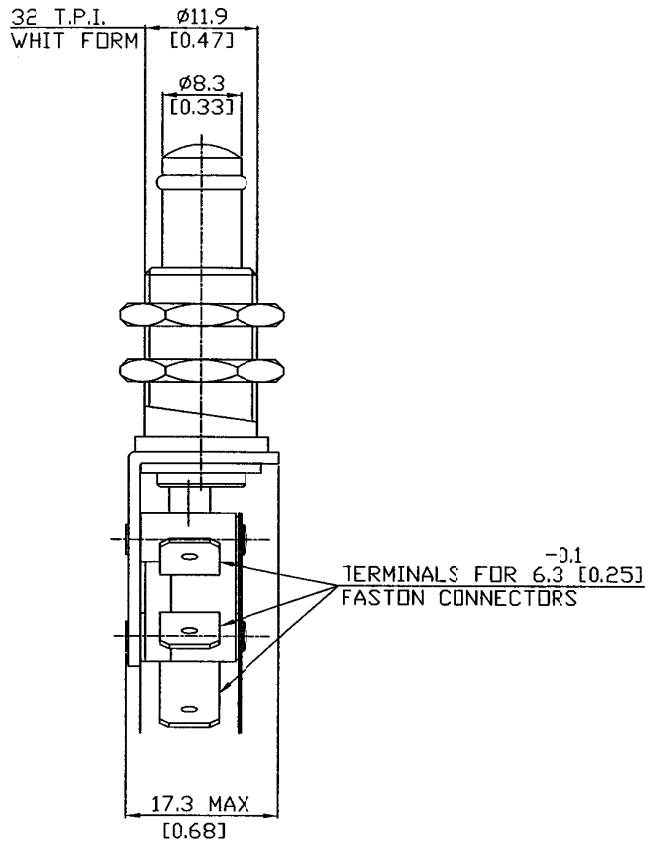

UNCONTROLLED ISSUE
PRINT ISSUE WILL NOT BE KEPT UP TO DATE

23 JAN 2003

ISSUE	REVISION	DATE
1	FIRST ISSUE	17/09/02

saia-burgess
Smart solutions for comfort and safety
Saia-Burgess Gateshead Limited
Dukesway, Team Valley Trading Estate
Gateshead, Tyne & Wear NE11 0UB
Tel: +44(0) 191 401 6100
Fax: +44(0) 191 401 6322
www.saia-burgess.co.uk

THIRD ANGLE PROJECTION

DO NOT SCALE

THIS DRAWING MUST ONLY BE AMENDED ON A CAD SYSTEM

ALL DIMENSIONS SPECIFIED IN MILLIMETRES

TOLERANCES UNLESS STATED:

NO DECIMAL PLACE	±0.50
1 DECIMAL PLACES	±0.25
2 DECIMAL PLACES	±0.15
ANGULAR	±1°

INCH - OUNCE UNITS [IN BRACKETS]

DRAWN	T.BELL.	CHECKED BY	
DATE	17/09/02	ENGINEERING	
SCALE	2/1	QUALITY ASSURANCE	

APPROVED

TITLE / DESCRIPTION
VCF9Q1 - UL

Drg No :- C 44606

A3