THIS DRAWING IS UNPUBLISHED. RELEASED FOR PUBLICATION -.- .
© COPYRIGHT - By - ALL RIGHTS RESERVED.

LOC	DIST
GP	00

REVISIONS

P	LTR	DESCRIPTION	DATE	DWN	APVD
	A1	REVISED PER ECO-11-004835	11MAR11	RK	HMR

1. MATERIAL:
   HOUSING: POLYESTER, UL 94V-0 RATED, BLACK.
   SHELL: CARBON STEEL.
   CONTACTS: PHOS. BRONZE.
   SCREWLOCKS: ZINC
   INSERTS: BRASS
2. FINISH:
   SHELL: 5.08um [.000200] MIN TIN OVER 2.54um [.000100] MIN COPPER.
   CONTACTS: SEE TABLE.
3. GOLD FLASH FOR A LENGTH OF 2.54[.100] MIN FROM MATING END, 2.54um [.000100] MIN TIN ON OPPOSITE END, OVER 1.27um [.000050] MIN NICKEL.
4. 0.76um [.000030] MIN GOLD FOR A LENGTH OF 2.54 [.100] MIN FROM MATING END, 2.54um [.000100] MIN TIN ON OPPOSITE END, OVER 1.27um [.000050] MIN NICKEL.
5. DATUMS AND BASIC DIMENSIONS ESTABLISHED BY CUSTOMER.
6. 2.79[.110] MAX IN SHELL TAB CLINCH AREAS.

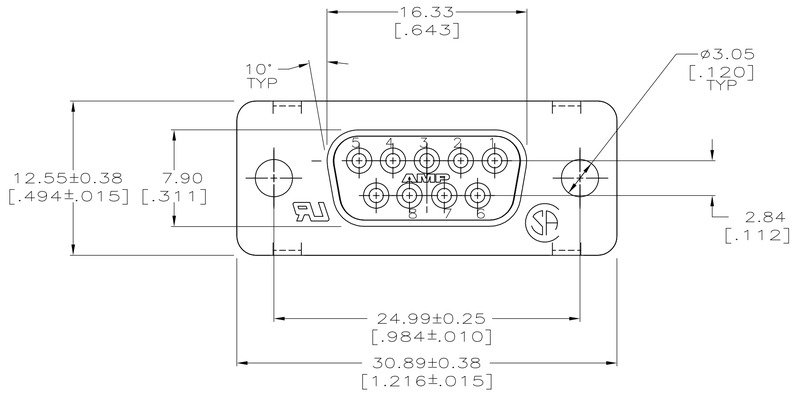

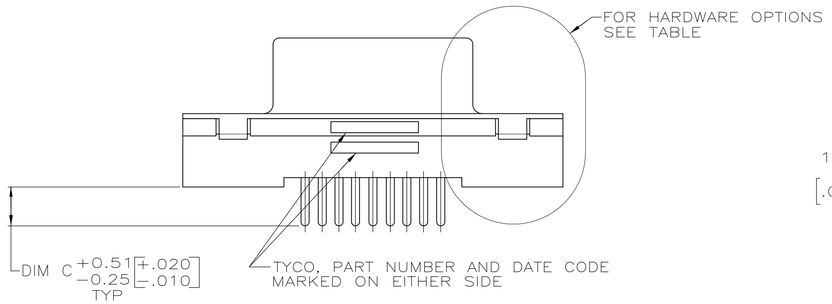

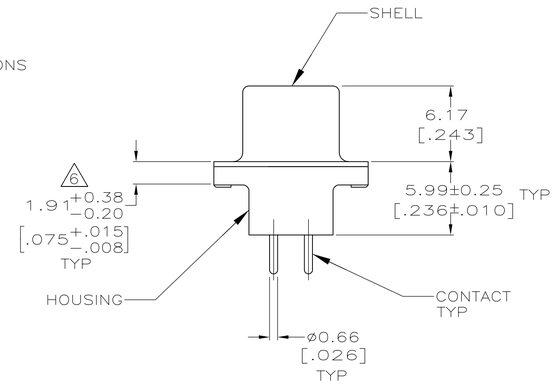

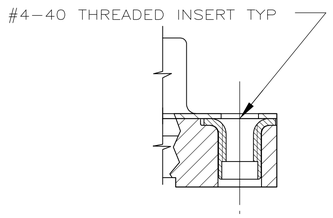

DETAIL D

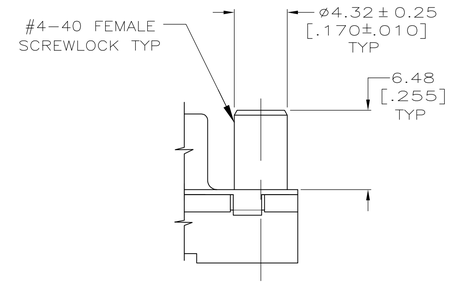

DETAIL E

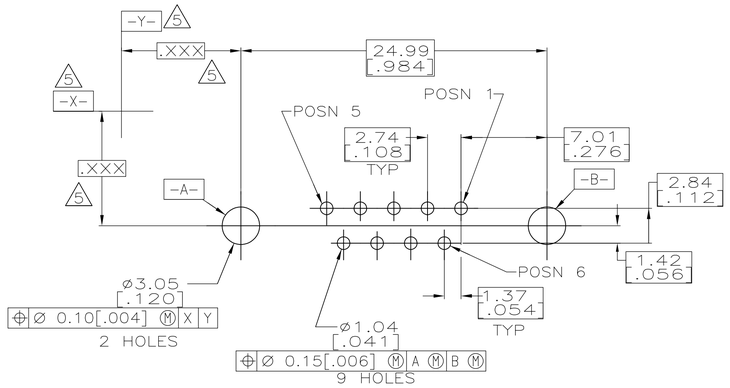

RECOMMENDED PC BOARD LAYOUT

CONNECTOR SIDE OF PC BOARD

HARDWARE OPTIONS	CONTACTS FINISH	C	PART NO
W/FEMALE SCREWLOCKS PER DETAIL E	4	4.32 [.170]	1-5747150-6
	4	3.18 [.125]	1-5747150-4
	3	3.18 [.125]	1-5747150-3
W/THREADED INSERTS PER DETAIL D	3	4.32 [.170]	5747150-9
	4	3.18 [.125]	5747150-8
	3	3.18 [.125]	5747150-7
WO/FEMALE SCREWLOCKS OR THREADED INSERTS AS SHOWN	4	4.32 [.170]	5747150-4
	4	3.18 [.125]	5747150-2

THIS DRAWING IS A CONTROLLED DOCUMENT.

DIMENSIONS: MM[INCHES]

TOLERANCES, UNLESS OTHERWISE SPECIFIED:
0 PLC ± -
1 PLC ± -
2 PLC ± 0.13 [.005]
3 PLC ± -
4 PLC ± -
ANGLES ± -

MATERIAL 1
FINISH 2

DWN B. MCMASTER 18MAY05
CHK S. BOLASH 18MAY05
APVD M. WALMSLEY 18MAY05
PRODUCT SPEC 108-40025
APPLICATION SPEC 114-40023
WEIGHT -

TE Connectivity

NAME RECEPTACLE ASSEMBLY, SIZE 1, 9 POSITION FRONT METAL SHELL, WITH OR WITHOUT SCREWLOCKS OR INSERTS.

SIZE	CAGE CODE	DRAWING NO	RESTRICTED TO
A1	00779	C-5747150	-

CUSTOMER DRAWING

SCALE 4:1 SHEET 1 OF 1 REV A1