The **SemiQ™ Family** of dc-dc converters from provides a high efficiency single output in a size that is only 60% of industry-standard quarter-bricks, while preserving the same pinout and functionality.

In high temperature environments, for output voltages ranging from 3.3 V to 1.0 V, the thermal performance of **SemiQ™** converters exceeds that of most competitors' 20-30 A quarter-bricks. This is accomplished through the use of patent pending circuit, packaging and processing techniques to achieve ultra-high efficiency, excellent thermal management and a very low body profile.

Low body profile and the preclusion of heat sinks minimize airflow shadowing, thus enhancing cooling for downstream devices. The use of 100% automation for assembly, coupled with advanced electric and thermal design, results in a product with extremely high reliability.

Operating from an 18-36 V input, the **SQ24 Series** converters of the **SemiQ™ Family** provide any standard output voltage from 12 V down to 1.0 V. Outputs can be trimmed from –20% to +10% of the nominal output voltage (±10% for output voltages 1.2 V and 1.0 V), thus providing outstanding design flexibility.

With a standard pinout and trim equations, the **SQ24 Series** converters are perfect drop-in replacements for existing quarter brick designs. Inclusion of this converter in new designs can result in significant board space and cost savings. The device is also available in a surface mount package.

In both cases the designer can expect reliability improvement over other available converters because of the **SQ24 Series'** optimized thermal efficiency.

Applications

- Telecommunications
- Data communications
- Wireless
- Servers

SQ24T and SQ24S Converters

Features

- RoHS lead-free solder and lead-solder-exempted products are available
- Delivers up to 15 A (50 W)
- Available in through-hole and SM packages
- Low weight: 0.53 oz (15 g)
- Low profile: 0.274" (6.96 mm)
- Extremely small footprint: 0.896" x 2.30" (2.06 in^2)
- Outputs available in 12.0, 8.0, 6.0, 5.0, 3.3, 2.5, 2.0, 1.8, 1.5, 1.2 and 1.0 V
- High efficiency – no heat sink required
- On-board input differential LC-filter
- Extremely low output and input ripple
- Start-up into pre-biased output
- No minimum load required
- Meets Basic Insulation requirements of EN60950
- Fixed-frequency operation
- Fully protected
- Remote output sense
- Output voltage trim range: +10%/−20% (except 1.2 V and 1.0 V outputs with trim range ±10%) with industry-standard trim equations
- High reliability: MTBF of 3.4 million hours, calculated per Telcordia TR-332, Method I Case 1
- Positive or negative logic ON/OFF option
- UL 60950 recognition in US and Canada and DEMKO certification per IEC/EN 60950
- Meets conducted emissions requirements of FCC Class B and EN 55022 Class B with external filter
- All materials meet UL94, V-0 flammability rating

Electrical Specifications (common to all versions)

Conditions: T_A=25 ºC, Airflow=300 LFM (1.5 m/s), Vin=24 VDC, All output voltages, unless otherwise specified.

PARAMETER	NOTES	MIN	TYP	MAX	UNITS
ABSOLUTE MAXIMUM RATINGS					
Input Voltage	Continuous	0		40	VDC
Operating Ambient Temperature		-40		85	°C
Storage Temperature		-55		125	°C
INPUT CHARACTERISTICS					
Operating Input Voltage Range		18	24	36	VDC
Input Under Voltage Lockout	Non-latching				
Turn-on Threshold		16	17	17.5	VDC
Turn-off Threshold		15	16	16.5	VDC
ISOLATION CHARACTERISTICS					
I/O Isolation		2000			VDC
Isolation Capacitance:	1.0 - 3.3 V		160		pF
	5.0 - 6.0 V		260		pF
	8.0 V, 12 V		230		pF
Isolation Resistance		10			MΩ
FEATURE CHARACTERISTICS					
Switching Frequency			415		kHz
Output Voltage Trim Range[1]	Industry-std. equations (1.5 - 12 V)	-20		+10	%
	Industry-std. equations (1.0 - 1.2 V)	-10		+10	%
Remote Sense Compensation[1]	Percent of V_{OUT}(NOM)			+10	%
Output Over-Voltage Protection	Non-latching (1.5 - 12 V)	117	125	140	%
	Non-latching (1.0 - 1.2 V)	124	132	140	%
Auto-Restart Period	Applies to all protection features		100		ms
Turn-On Time			4		ms
ON/OFF Control (Positive Logic)					
Converter Off		-20		0.8	VDC
Converter On		2.4		20	VDC
ON/OFF Control (Negative Logic)					
Converter Off		2.4		20	VDC
Converter On		-20		0.8	VDC

Additional Notes:

1. Vout can be increased up to 10% via the sense leads or up to 10% via the trim function, however total output voltage trim from all sources should not exceed 10% of V_{OUT}(NOM), in order to insure specified operation of over-voltage protection circuitry. See “Output Voltage Adjust/Trim” for detailed information.

Electrical Specifications: SQ24T/S15033 (3.3 Volts Out)

Conditions: T_A=25 ºC, Airflow=300 LFM (1.5 m/s), Vin=24 VDC, Vout=3.3 VDC unless otherwise specified.

PARAMETER	NOTES	MIN	TYP	MAX	UNITS
INPUT CHARACTERISTICS					
Maximum Input Current	15 ADC, 3.3 VDC Out @ 18 VDC In			3.2	ADC
Input Stand-by Current	Vin = 24 V, converter disabled		3		mADC
Input No Load Current (0 load on the output)	Vin = 24 V, converter enabled		100		mADC
Input Reflected-Ripple Current	25 MHz bandwidth		6		mA_{PK-PK}
Input Voltage Ripple Rejection	120 Hz		TBD		dB
OUTPUT CHARACTERISTICS					
Output Voltage Set Point (no load)		3.267	3.300	3.333	VDC
Output Regulation					
Over Line			±2	±5	mV
Over Load			±2	±5	mV
Output Voltage Range	Over line, load and temperature[1]	3.250		3.350	VDC
Output Ripple and Noise - 25 MHz bandwidth	Full load + 10 µF tantalum + 1 µF ceramic		30	50	mV_{PK-PK}
External Load Capacitance	Plus full load (resistive)			15,000	µF
Output Current Range		0		15	ADC
Current Limit Inception	Non-latching		18	20	ADC
Peak Short-Circuit Current	Non-latching. Short=10mΩ.		30	40	A
RMS Short-Circuit Current	Non-latching			5.3	Arms
DYNAMIC RESPONSE					
Load Change 25% of Iout Max, di/dt = 0.1 A/µs	Co = 1 µF ceramic		100		mV
di/dt = 5 A/µs	Co = 450 µF tant. + 1 µF ceramic		100		mV
Setting Time to 1%			100		µs
EFFICIENCY					
100% Load			88		%
50% Load			88		%

Additional Notes: 1. -40 ºC to 85 ºC

Physical Information

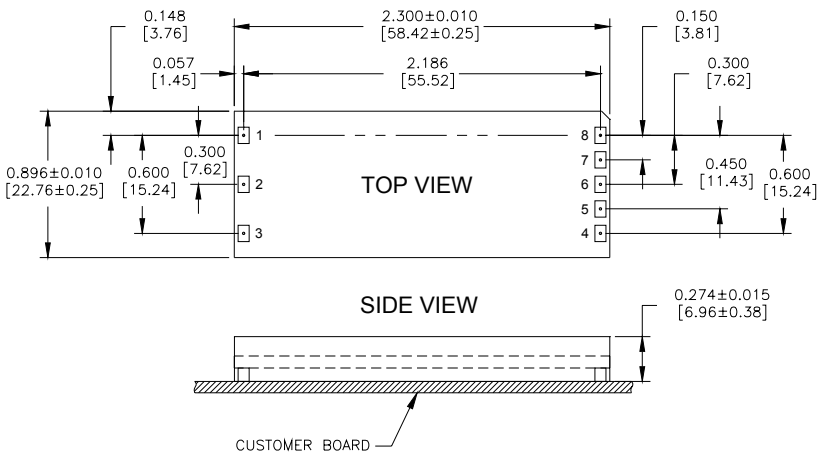

SQ24S Pinout (Surface Mount)

SQ24S Platform Notes

- All dimensions are in inches [mm]
- Connector Material: Copper
- Connector Finish: Gold over Nickel
  Optional: Tin/Lead over Nickel
- Converter Weight: 0.53 oz [15 g]
- Recommended Surface-Mount Pads:
  Min. 0.080" X 0.112" [2.03 x 2.84]
  Max. 0.092" X 0.124" [2.34 x 3.15]

Pad/Pin Connections	
Pad/Pin #	**Function**
1	Vin (+)
2	ON/OFF
3	Vin (-)
4	Vout (-)
5	SENSE(-)
6	TRIM
7	SENSE(+)
8	Vout (+)

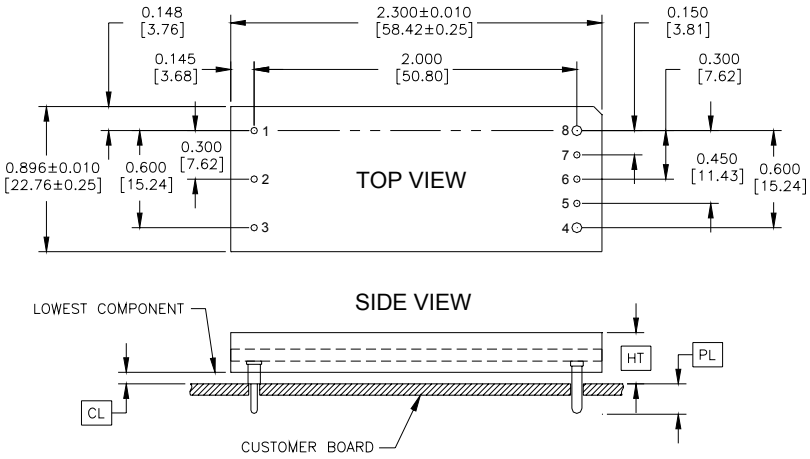

SQ24T Pinout (Through-hole)

Height Option	HT (Max. Height)	CL (Min. Clearance)
	+0.000 [+0.00] -0.038 [- 0.97]	+0.016 [+0.41] -0.000 [- 0.00]
A	0.319 [8.10]	0.030 [0.77]
B	0.352 [8.94]	0.063 [1.60]
C	0.516 [13.11]	0.227 [5.77]
D	0.416 [10.57]	0.127 [3.23]
E	0.298 [7.57]	0.009 [0.23]

Pin Option	PL Pin Length
	±0.005 [±0.13]
A	0.188 [4.77]
B	0.145 [3.68]
C	0.110 [2.79]

SQ24T Platform Notes

- All dimensions are in inches [mm]
- Pins 1-3 and 5-7 are Ø 0.040" [1.02] with Ø 0.078" [1.98] shoulder
- Pins 4 and 8 are Ø 0.062" [1.57] without shoulder
- Pin material: Brass
- Pin Finish: Tin/Lead over Nickel
- Converter Weight: 0.53 oz [15 g]

Converter Part Numbering/Ordering Information

Product Series	Input Voltage	Mounting Scheme	Rated Load Current	Output Voltage		ON/OFF Logic	Maximum Height [HT]	Pin Length [PL]	Special Features	RoHS
SQ	**24**	**S**	**05**	**080**	**-**	**N**	**S**	**0**	**0**	
1/8th Brick Format	18-36 V	S ⇒ Surface Mount	15 ⇒ 15 A (1.0 – 3.3 V) 10 ⇒ 10 A (5.0 V) 08 ⇒ 8 A (6.0 V) 05 ⇒ 5.3 A (8.0 V) 04 ⇒ 4 A (12.0 V)	010 ⇒ 1.0 V 012 ⇒ 1.2 V 015 ⇒ 1.5 V 018 ⇒ 1.8 V 020 ⇒ 2.0 V 025 ⇒ 2.5 V 033 ⇒ 3.3 V 050 ⇒ 5.0 V 060 ⇒ 6.0 V 080 ⇒ 8.0 V 120 ⇒ 12.0 V		N ⇒ Negative P ⇒ Positive	SMT S ⇒ 0.289”	SMT 0 ⇒ 0.00”	0 ⇒ STD S ⇒ SMC Tin/Lead over Nickel T ⇒ Special Trim[2] (For 1.2V & 1.0V only)	No Suffix ⇒ RoHS lead-solder-exemption compliant G ⇒ RoHS compliant for all six substances

Product Series	Input Voltage	Mounting Scheme	Rated Load Current	Output Voltage		ON/OFF Logic	Maximum Height [HT]	Pin Length [PL]	Special Features	RoHS
SQ	**24**	**T**	**05**	**080**	**-**	**N**	**B**	**A**	**0**	
1/8th Brick Format	18-36 V	T⇒ Through-hole	15 ⇒ 15 A (1.0 – 3.3 V) 10 ⇒ 10 A (5.0 V) 08 ⇒ 8 A (6.0 V) 05 ⇒ 5.3 A (8.0 V) 04 ⇒ 4 A (12.0 V)	010 ⇒ 1.0 V 012 ⇒ 1.2 V 015 ⇒ 1.5 V 018 ⇒ 1.8 V 020 ⇒ 2.0 V 025 ⇒ 2.5 V 033 ⇒ 3.3 V 050 ⇒ 5.0 V 060 ⇒ 6.0 V 080 ⇒ 8.0 V 120 ⇒ 12.0 V		N ⇒ Negative P ⇒ Positive	Through hole A ⇒ 0.319” B ⇒ 0.352” C ⇒ 0.516” D ⇒ 0.416” E ⇒ 0.298”	Through hole A ⇒ 0.188” B ⇒ 0.145” C ⇒ 0.110”	0 ⇒ STD S ⇒ SMC Tin/Lead over Nickel T ⇒ Special Trim[2] (For 1.2V & 1.0V only)	No Suffix ⇒ RoHS lead-solder-exemption compliant G ⇒ RoHS compliant for all six substances

1. The example above describes P/N SQ24T05080-NBA0: 18-36 V input, through-hole mounting, 5.3 A @ 8.0 V output, negative ON/OFF logic, a maximum height of 0.352”, a through the board pin length of 0.188”, and RoHS lead-solder-exemption compliancy. Please consult factory regarding availability of a specific version.
2. For definitions, operation, and associated trim equations for all trim options please refer to Application Note 103, Trim Feature for Isolated dc-dc converters.

Model numbers highlighted in yellow or shaded are not recommended for new designs.

NUCLEAR AND MEDICAL APPLICATIONS - Power-One products are not designed, intended for use in, or authorized for use as critical components in life support systems, equipment used in hazardous environments, or nuclear control systems without the express written consent of the respective divisional president of Power-One, Inc.

TECHNICAL REVISIONS - The appearance of products, including safety agency certifications pictured on labels, may change depending on the date manufactured. Specifications are subject to change without notice.