DC/DC Converters

TMDC 60 Series, 60 Watt

Features

- Fully encapsulated low profile plastic case
- Ultra wide 4:1 input voltage range
- Operating temperature range –40°C to +85°C
- Reinforced I/O isolation 2500 VDC
- Excellent efficiency up to 92 %
- Input filter to meet EN 55022, class A
- Optional DIN-Rail mount adapter
- No minimum load required
- Input polarity protection
- Power good LED indicator
- Remote On/Off
- 3-year product warranty

The TMDC 60 Series is a range of encapsulated high performance DC/DC converter modules with ultra wide input voltage ranges. With a very high efficiency of up to 92% and the use of highest grade components these 60 W converters can be operated in an ambient temperature range of -40°C up to 70°C with full load and up to 85°C with 50% load reduction. The EMC immunity is aligned for industrial applications and DIN-rail mount adapters are available as option. Input polarity protection remote On/Off function and power good LED indicator makes this unit to a practical and reliable DC source for any application - Fit and forget!

Models

Order code	Input voltage range	Output voltage	Output current max.	Efficiency
TMDC 60-2411	9 – 36 VDC (nominal 24 VDC)	5.1 VDC	12'000 mA	90 %
TMDC 60-2412		12 VDC	5'000 mA	91 %
TMDC 60-2415		24 VDC	2500 mA	91 %
TMDC 60-2418		48 VDC	1250 mA	91 %
TMDC 60-4811	18 – 75 VDC (nominal 48 VDC)	5.1 VDC	12'000 mA	91 %
TMDC 60-4812		12 VDC	5'000 mA	92 %
TMDC 60-4815		24 VDC	2500 mA	91 %
TMDC 60-4818		48 VDC	1250 mA	91 %

Input Specifications

Input current at no load (nominal input voltage)	– 24 Vin	5.1 & 12 VDC models:	100 mA typ.
		24 VDC models:	110 mA typ.
		48 VDC models:	60 mA typ.
	– 48 Vin	5.1 VDC models:	40 mA typ.
		12 & 24 VDC models:	60 mA typ.
		48 VDC models:	50 mA typ.
Surge voltage (100 msec. max.)		24 Vin models:	50 V max.
		48 Vin models:	100 V max.
Start up time			50 ms max.
Conducted noise (input)			EN 55022 class A, FCC part 15 class A (without external components)
Start-up voltage / under voltage lockout		24 Vin models:	9 VDC max./ 7.5 VDC typ.
		48 Vin models:	18 VDC max./ 16 VDC typ.
ESD (electrostatic discharge)			EN 61000-4-2, air ±8 kV, contact ±4 kV, perf. criteria A
Radiated immunity			EN 61000-4-3, 10 V/m, perf. criteria A
Fast transient / surge (with external input capacitor)			EN 61000-4-4, ±2 kV, perf. criteria A EN 61000-4-5, ±2 kV, perf. criteria A
Conducted immunity			EN 61000-4-6, 10 Vrms, perf. criteria A

Output Specifications

Voltage set accuracy			±2.0 % max.
Regulation	– Input variation Vin min. to Vin max.		1.5 % max.
	– Load variation 0 – 100 %		1.0 % max.
Minimum load			not required
Temperature coefficient			±0.02 %/K
Ripple and noise (20 MHz Bandwidth)		5.1 VDC models:	100 mVpk-pk. typ.
		12 & 24 VDC models:	150 mVpk-pk typ.
		48 VDC models:	200 mVpk-pk. typ.
Transient response (alignment to 1% at load step change 75% to 100%)			250 µs typ.
Over voltage protection			120 % of Vout (Zener diode clamp)
Output current limitation			at 150 % of Iout max.
Short circuit protection			hiccup mode, automatic recovery
Capacitive load		5.1 VDC models:	20'400 µF max.
		12.0 VDC models:	3'540 µF max.
		24.0 VDC models:	890 µF max.
		48.0 VDC models:	220 µF max.

All specifications valid at nominal input voltage, full load and +25°C after warm-up time unless otherwise stated.

General Specifications

Temperature ranges	– Operating ambient with natural convection (20 LFM) – IEC/EN/UL60950-1 approved ambient – Case temperature – Storage	–40°C to +85°C (see load derating) +60°C max. (without derating) +95°C max. –50°C to +125°C
Load derating (with natural convection 20 LFM)		3.3 %/K above +70°C
Thermal impedance	– Natural convection 20 LFM	3.5 K/W
Humidity (non condensing)		95 % rel H max.
Reliability, calculated MTBF (MIL-HDBK-217F, at +25°C, ground benign)		242'029 h
Isolation voltage (60 sec.)	– Input/Output	2500 VDC reinforced
Isolation capacitance	– Input/Output	3000 pF max. (100 kHz, 1 V)
Isolation resistance	– Input/Output	>1000 Mohm (500 VDC)
Switching frequency		210 kHz typ.
Remote On/Off	– On: – Off: – Off idle current:	3.5 to 12 VDC to on terminal 1 or open circuit. 0 to +1.2 VDC on terminal 1 reference to -Vin 3 mA typ.
Safety standards	– CB test report – UL test certificat – Certification documents	UL/cUL 60950-1 2nd edition, IEC 60950-1:2005 (2nd edition)+Am1:2009 +Am2:2013, EN 60950-1:2006+A11:2009+A1: 2010+A12:2011+A2:2013 UL/cUL 60950-1 2nd edition, CSA C22.2 No. 60950-1-07, 2nd Ed. www.tracopower.com/overview/tmdc60

Physical Specifications

Casing material		plastic resin (UL 94V-0 rated)
Weight		300 g (10.57 oz)
Soldering temperature		max. 260°C / 10 sec. (1.5 mm from casing)
Environmental compliance	– Reach declaration – RoHS	www.tracopower.com/overview/tmdc60 directive 2011/65/EU

All specifications valid at nominal input voltage, full load and +25°C after warm-up time unless otherwise stated.

Outline Dimensions

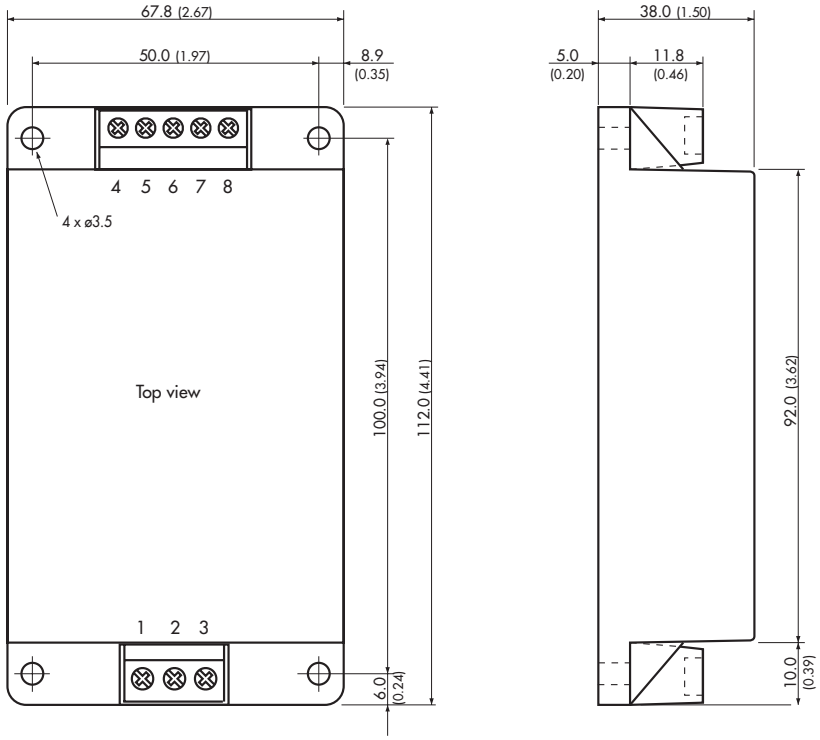

Terminal connection	
Pin	**Single**
1	Remote On/Off
2	–Vin (GND)
3	+Vin (Vcc)
4	NC
5	+Vout
6	NC
7	–Vout
8	NC

Dimensions in [mm], () = Inch
Pin diameter: 1.0 ±0.05 (0.04 ±0.002)
Pin pitch tolerance: ±0.13 (±0.005)
Case tolerances: ±0.25 (±0.01)

DIN-Rail mount adapter (optional)

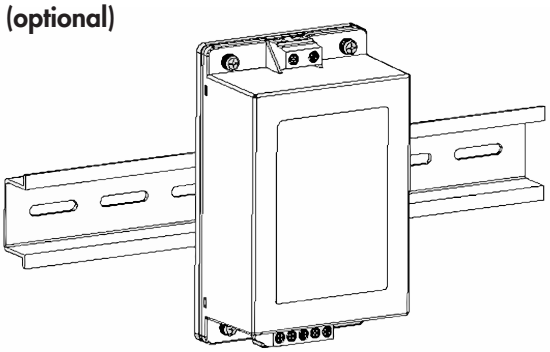
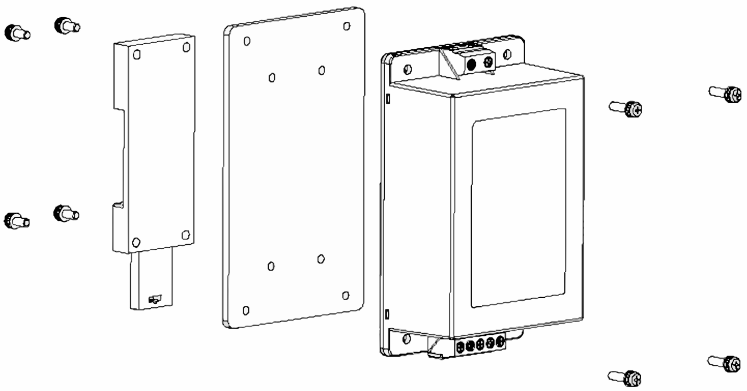
Order code: TMP-MK2
Weight: 59 g (2.08 oz) without converter