DRAWING MADE IN THIRD ANGLE PROJECTION

LOC	DIST
G	14

THIS DRAWING IS UNPUBLISHED. RELEASED FOR PUBLICATION . 1958..

© COPYRIGHT 1958 BY AMP INCORPORATED, HARRISBURG, PA. ALL INTERNATIONAL RIGHTS RESERVED. AMP PRODUCTS MAY BE COVERED BY U.S. AND FOREIGN PATENTS AND/OR PATENTS PENDING.

REVISIONS

P	F	ZONE	LTR	DESCRIPTION		DATE	APPROVED
✓	✓		C	REDRAWN & REV. PER P-7000	RB	9-23-81	
	✓		D	OBS. -1 REV. G 2588	BT	10-12-87	PMC
✓	✓		E	REACT. -1 REV G-4619	JT	2-25-88	

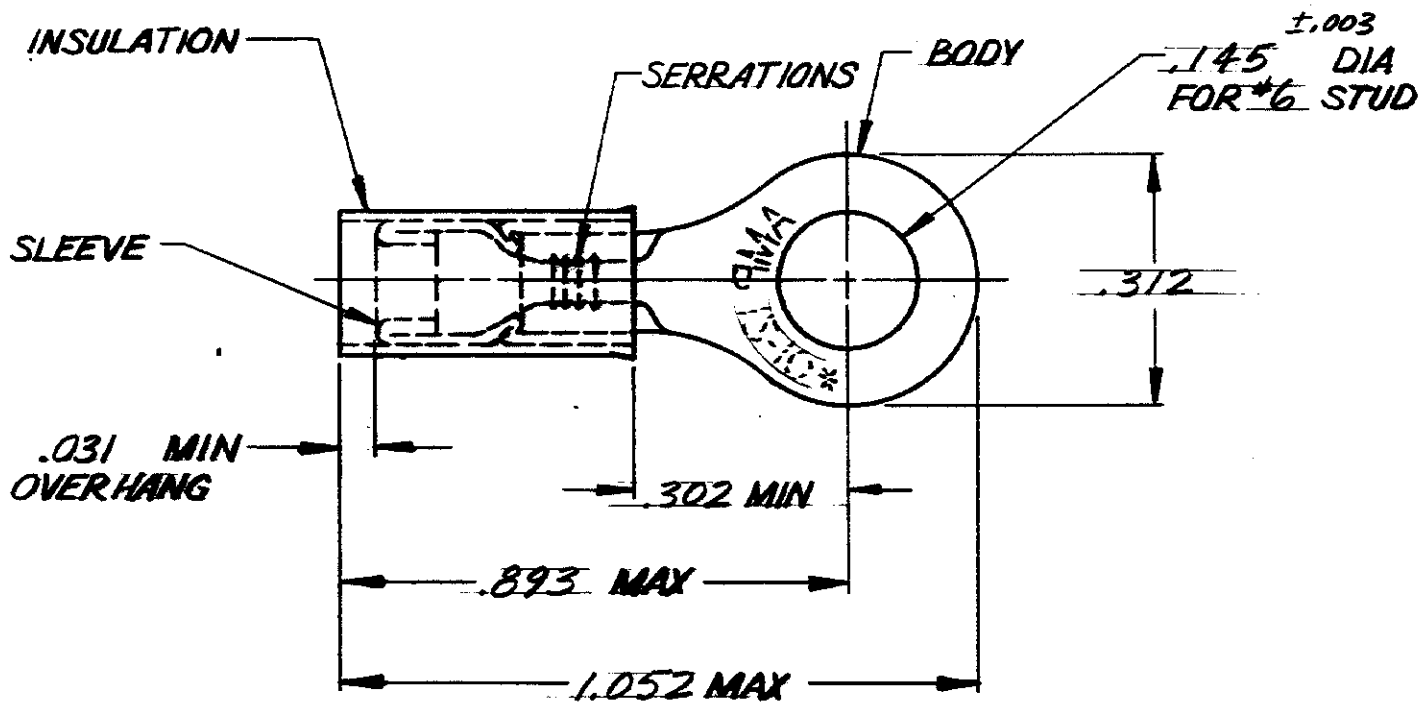

FOR .150 TO .230 WIRE INSULATION DIA
TONGUE MATERIAL THICKNESS = .040 ±.002

QTY.	DESCRIPTION	MATERIAL AND FINISH	PART NO
1	WIRE TERMINAL ON TAPE	BODY AND SLEEVE: COPPER (QQ-C-576) TIN PL (MIL-T-10727)	326886-1
1	WIRE TERMINAL	INSULATION: NYLON (MIL-M-20793) TYPE I COLOR: YELLOW	326886

#	#
326886	326886-1
PART No.	PT. No. ON TAPE

UNLESS OTHERWISE SPECIFIED DIMENSIONS ARE IN INCHES. TOLERANCES ON: DECIMALS ±.008 ANGLES ±5°

MATERIAL: SEE TABLE

FINISH: SEE TABLE

CONTRACT NO

DR R. BROWN 9-23-81

CHK 9/21/81

APPD 9-23-81

APPD

DSGN APPD

OTHER APPD

AMP — AMP INCORPORATED Harrisburg, Pa.

NAME: TERMINAL P.I.D.G.-RING TONGUE

WIRE SIZE: 12-10

SIZE: B

FSCM NO: 00779

DRAWING NO: 326886

SCALE: NTS

SHEET: 1 OF 1

AMP 1470-15 REV 2-81

CUSTOMER DRAWING