WIRING DIAGRAM

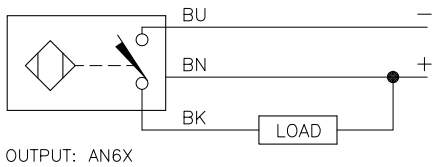

SHORT–CIRCUIT AND OVERLOAD PROTECTED

LOCKNUT LN–SS12

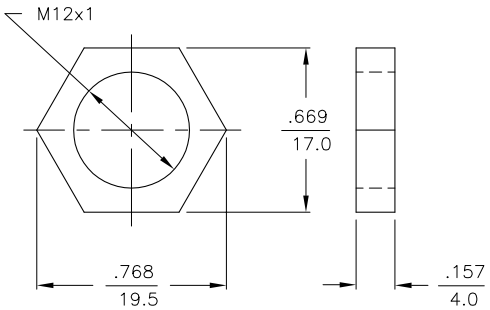

SPECIFICATIONS

RATED OPERATING DISTANCE	8mm [.315]
MOUNTING MODE	NON–FLUSH, PARTIALLY FLUSH MOUNTABLE
TEMPERATURE DRIFT	≤±10% ≤±15%, ≤ −25°C v ≥ +70°C
HYSTERESIS	3–15%
MIN. REPEAT ACCURACY	≤ 2%
OPERATING TEMPERATURE	−30°C to +85°C (−22°F to +185°F)
RATED OPERATIONAL VOLTAGE	10–30 VDC
MAX. RIPPLE	≤ 10%
RATED OPERATIONAL CURRENT	≤ 200 mA
NO–LOAD CURRENT	≤ 15 mA
MAX. OFF–STATE CURRENT	≤ 0.1 mA
RATED INSULATION VOLTAGE	≤ 0.5 kV
SHORT–CIRCUIT PROTECTION	YES
MAX. VOLTAGE DROP	≤ 1.8 V
WIRE BREAKAGE PROTECTION	INCORPORATED
REVERSE POLARITY PROTECTION	INCORPORATED
OUTPUT FUNCTION	3–WIRE, NORMALLY OPEN, NPN
MAX. SWITCHING FREQUENCY	≤ 2 kHz
HOUSING MATERIAL	METAL, A2 1.4301 (AISI 304)
ACTIVE FACE	PLASTIC, PBT
END CAP	PLASTIC, EPTR
VIBRATION RESISTANCE	55 Hz (IN ALL 3 PLANES)
SHOCK RESISTANCE	30 g, 11 ms
DEGREE OF PROTECTION	IP 68
SWITCHING STATUS INDICATION	LED, YELLOW

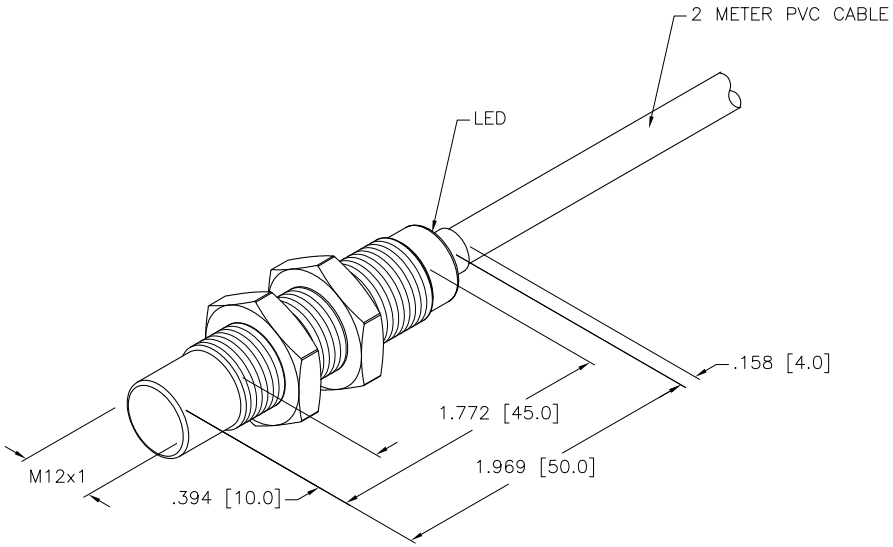

SOURCE DRAWING - FOR REFERENCE ONLY

RELATED DOCUMENTS	3RD ANGLE PROJECTION	THIS DRAWING IS PROPERTY OF TURCK INC. USE OF THIS DOCUMENT WITHOUT WRITTEN PERMISSION IS PROHIBITED.	TURCK INC High Technology Sensors and Automation Controls	3000 CAMPUS DRIVE MINNEAPOLIS, MN 55441 1–800–544–7769 (763) 553–7300 (763) 553–0708 fax turck.com
1. 2. 3. 4.				
MATERIAL	ALL DIMENSIONS DISPLAYED ON THIS DRAWING ARE FOR REFERENCE ONLY CONTACT TURCK FOR MORE INFORMATION	DRFT RDS / DATE 03/16/05 DSGN EH / SCALE 1=1.0 UNIT OF MEASUREMENT **INCH [MILLIMETER]** DO NOT SCALE THIS DRAWING	DESCRIPTION NI 8U–EM12–AN6X IDENTIFICATION NO. M1644320 REV A	
FINISH			FILE: M1644320	SHEET 1 OF 1

REV	DESCRIPTION	BY	DATE	ECO NO.
A	DRAWING RELEASE	RDS	03/16/05	