THIS DRAWING IS UNPUBLISHED. RELEASED FOR PUBLICATION -,- .
© COPYRIGHT - BY TYCO ELECTRONICS CORPORATION. ALL RIGHTS RESERVED.

LOC	DIST
FT	64

REVISIONS

P	LTR	DESCRIPTION	DATE	DWN	APVD
	E	REV PER OG3C-0162-99	17NOV00	RB	HW
	E1	REVISED PER ECO-09-021510	05SEP09	KK	AEG
	F	ECR-13-018647	14MAR14	W.W	C.W

1. RECEPTACLE ACCEPTS A 0.20-0.36 [.008-.014] THICK I.C. LEAD.
2. TUBE LOADED FOR AUTOMATIC INSERTION.
3. LUBRICANT: MONSANTO OS-138.
4. HOUSING: GLASS-FILLED, THERMOPLASTIC, 94V-0, BLACK.
   CONTACT: PH BRONZE.
5. CONTACT: TINNED.
6. OBSOLETE PARTS: OBSOLETE CIS STREAMLINING PER D.RENAUD/D.SINISI

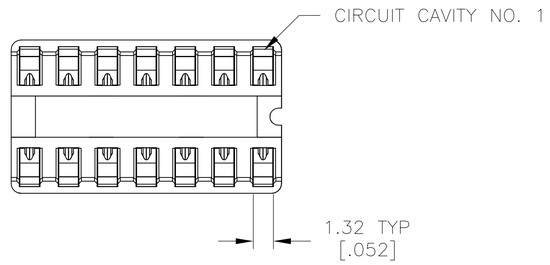

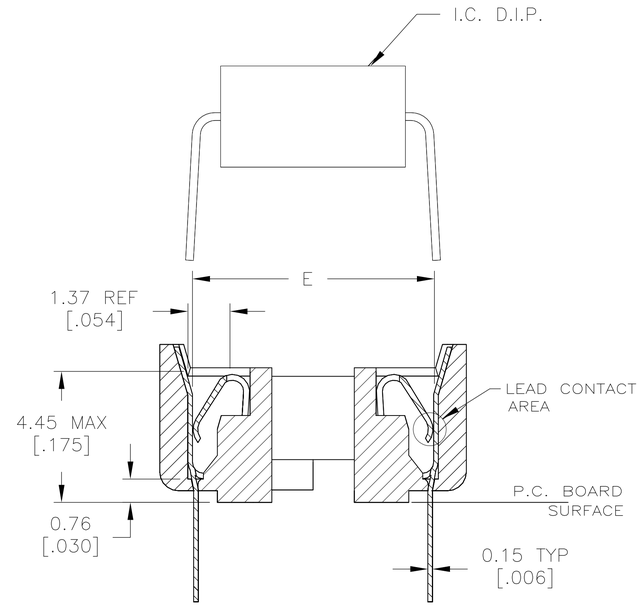

SECTION A-A
SCALE 10:1

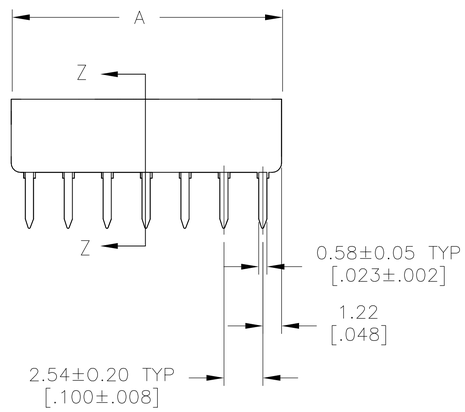

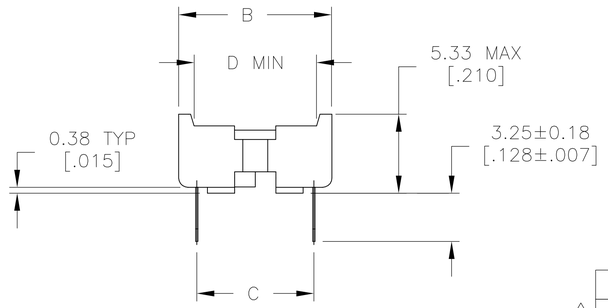

		E	D	C ±0.20 [±.008]	B	A	POSN	PART NUMBER
	OBSOLETE	~~23.11 [.910]~~	~~23.39 [.921]~~	~~22.86 [.900]~~	~~26.01 [1.024]~~	~~81.66 [3.215]~~	~~64~~	~~6-382568-4~~
6	OBSOLETE	~~15.49 [.610]~~	~~15.77 [.621]~~	~~15.24 [.600]~~	~~17.63 [.694]~~	~~60.83 [2.395]~~	~~48~~	~~4-382568-8~~
		15.49 [.610]	15.77 [.621]	15.24 [.600]	17.63 [.694]	50.67 [1.995]	40	4-382568-0
F	OBSOLETE	~~15.49 [.610]~~	~~15.77 [.621]~~	~~15.24 [.600]~~	~~17.63 [.694]~~	~~40.51 [1.595]~~	~~32~~	~~3-382568-2~~
		15.49 [.610]	15.77 [.621]	15.24 [.600]	17.63 [.694]	35.43 [1.395]	28	2-382568-8
		15.49 [.610]	15.77 [.621]	15.24 [.600]	17.63 [.694]	30.35 [1.195]	24	2-382568-5
F	OBSOLETE	~~7.87 [.310]~~	~~8.15 [.321]~~	~~7.62 [.300]~~	~~10.01 [.394]~~	~~30.35 [1.195]~~	~~24~~	~~2-382568-4~~
	OBSOLETE	~~10.41 [.410]~~	~~10.69 [.421]~~	~~10.16 [.400]~~	~~12.55 [.494]~~	~~27.81 [1.095]~~	~~22~~	~~2-382568-2~~
F	OBSOLETE	~~7.87 [.310]~~	~~8.15 [.321]~~	~~7.62 [.300]~~	~~10.01 [.394]~~	~~25.27 [.995]~~	~~20~~	~~2-382568-0~~
	OBSOLETE	~~7.87 [.310]~~	~~8.15 [.321]~~	~~7.62 [.300]~~	~~10.01 [.394]~~	~~22.73 [.895]~~	~~18~~	~~1-382568-8~~
		7.87 [.310]	8.15 [.321]	7.62 [.300]	10.01 [.394]	20.19 [.795]	16	1-382568-6
	OBSOLETE	~~7.87 [.310]~~	~~8.15 [.321]~~	~~7.62 [.300]~~	~~10.01 [.394]~~	~~17.65 [.695]~~	~~14~~	~~1-382568-4~~
	OBSOLETE	~~7.87 [.310]~~	~~8.15 [.321]~~	~~7.62 [.300]~~	~~10.01 [.394]~~	~~10.03 [.395]~~	~~8~~	~~382568-8~~
	OBSOLETE	~~7.87 [.310]~~	~~8.15 [.321]~~	~~7.62 [.300]~~	~~10.01 [.394]~~	~~7.49 [.295]~~	~~6~~	~~382568-6~~

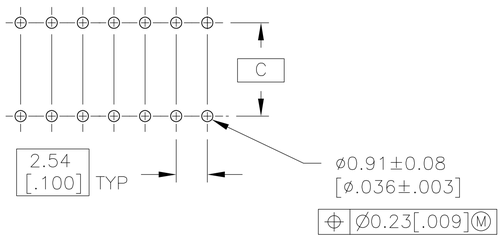

RECOMMENDED MOUNTING HOLE PATTERN
SCALE 4:1

THIS DRAWING IS A CONTROLLED DOCUMENT.

DIMENSIONS: INCHES

TOLERANCES UNLESS OTHERWISE SPECIFIED:
0 PLC ± -
1 PLC ± -
2 PLC ± 0.13 [.005]
3 PLC ± -
4 PLC ± -
ANGLES ± -

MATERIAL: SEE NOTE 4
FINISH: SEE NOTE 5

DWN R BROWN 17NOV00
CHK H WYNKOOP 17NOV00
APVD H WYNKOOP 17NOV00
PRODUCT SPEC 108-1066
APPLICATION SPEC 114-1049
WEIGHT -

Tyco Electronics — Tyco Electronics Corporation, Harrisburg, PA 17105

NAME: SOCKET ASSY, DIP, SPCL LUBE, DIPLOMATE™ DL -

SIZE A1 | CAGE CODE 00779 | DRAWING NO C-382568 | RESTRICTED TO -

CUSTOMER DRAWING | SCALE 5:1 | SHEET 1 OF 1 | REV F