ENGLISH

Datasheet

New5.08mm Plug with Flanges 15A 8 way

RS Stock 874-4751

Dimensions: (mm)

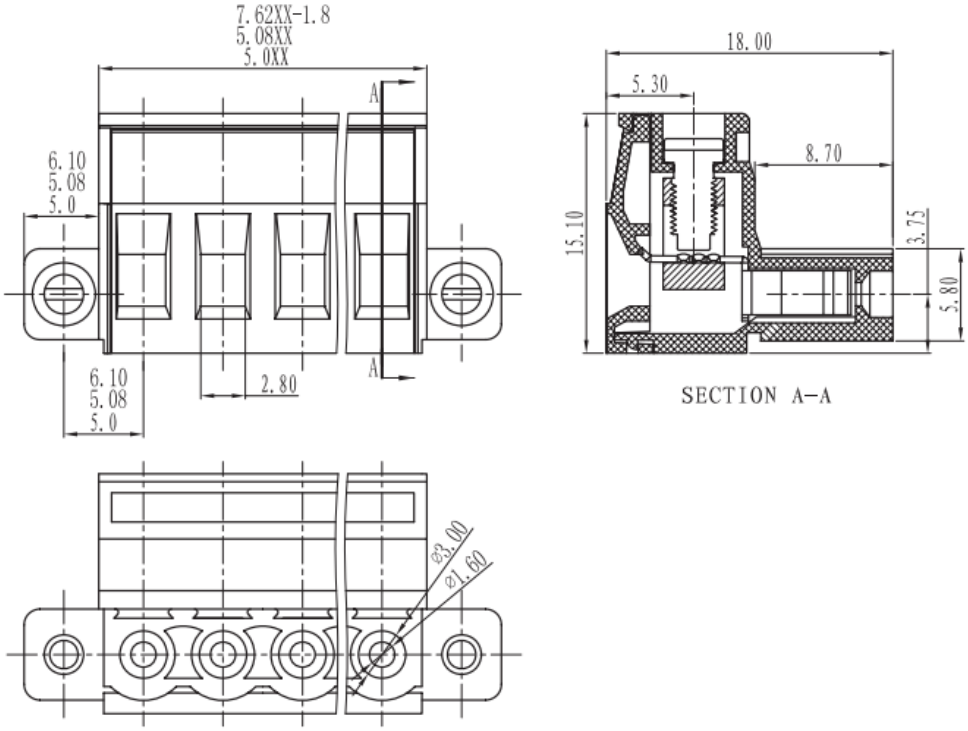

RS, Professionally Approved Products, gives you professional quality parts across all products categories. Our range has been testified by engineers as giving comparable quality to that of the leading brands without paying a premium price.

ENGLISH

Specifications

Electrical

Standard:	UL	IEC
Rated voltage:	300V	320V
Rated current:	15A	20A

Contact resinstance: 20mΩ

Wire range: 28-14AWG 2.5mm^2

Withstanding voltage: AC2000V/1Min

Insulation resistance: 500MΩ/DC500V

Mechanical

Temp.Range: -40° C~+105° C

Torque: 0.5Nm(4.5lb`in)

Strip length: 7-8mm

Dimensions

Pitch: 5.00mm,5.08mm,7.62mm

Poles: 2P-24P

Material

Housing: PA66,UL94V-0

Screws: M3.0,steel Zinc plated

Wire guard: Brass,Ni plated

Clamp: Phosphor bronze,Ni plated

RS, Professionally Approved Products, gives you professional quality parts across all products categories. Our range has been testified by engineers as giving comparable quality to that of the leading brands without paying a premium price.