Product Information

MONO
5020PJH080L51-10 RAL9006

EAN 4031582308402

Swivel castor, housing made of Polyamide, with blind hole for furniture fittings.
Wheel centre made of Polypropylene, Tread: TENTEprene (thermoplastic rubber), grey non-marking, with threadguards, plain bearing

Technical Data	
Wheel diameter	80 mm
Width of Tread	24 mm
Centre hole	10 mm
Offset	34 mm
Swivel Interference	148 mm
Overall height	104 mm
Temperature	- 10 / + 40 °C
Standard	EN 12528
Weight	0.146 kg
Swivel Radius	74 mm
Hardness of tread	A 87 Shore
Load capacity	70 kg
Load capacity (static)	140 kg

Roll performance	+ + + + +
Movement noise	+ + + + +
Attrition	+ + + + +
Corrosion resistance	+ + + + +

© Copyright 2014, TENTE International, www.tente.com, 17/02/2014

Product Information

MONO
5020PJH080L51-10 RAL9006

EAN 4031582308402

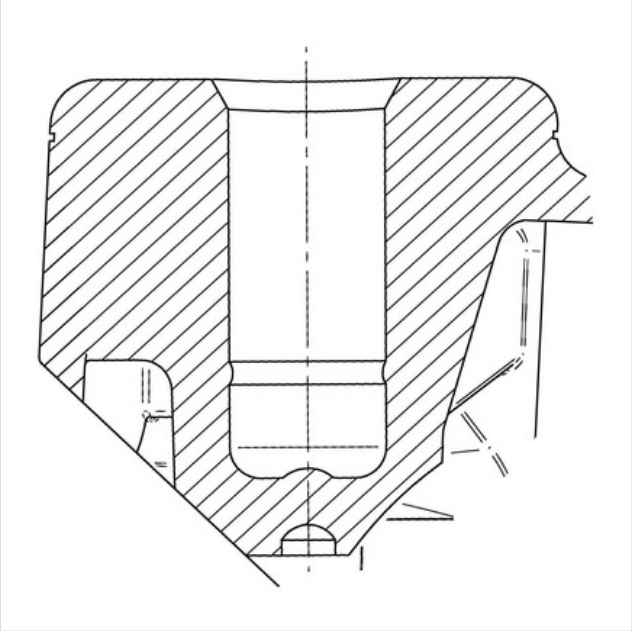

© Copyright 2014, TENTE International, www.tente.com, 17/02/2014