# Dual Output Hall Effect Sensor
# Fully Redundant, Non-Contacting Rotary

# 9900 Series

The BEI Duncan 9900 Series offers a non-contacting Hall effect sensor in a rugged design, ideally suited for tight packaging constraints while providing superior reliability and durability. Unlike most similar products, the 9900 provide the full redundancy of two independent Hall detectors in a common package (single output sensors also available). Each Hall detector is rigidly supported to meet the severe durability requirements of demanding applications as automotive and off-highway. Rotating sintered magnets enable the stationary detectors to perform with improved accuracy and reliability, including excellent temperature stability and corrosion resistance. One-time factory programmability allows for greater flexibility in design and custom outputs.

Fully sealed, (meeting and/or exceeding IP66/IP67 standards) the 9900 is impervious to contamination and moisture. An integrally molded, 6-pin connector makes a sealed connection with industry standard Packard Electric connectors.

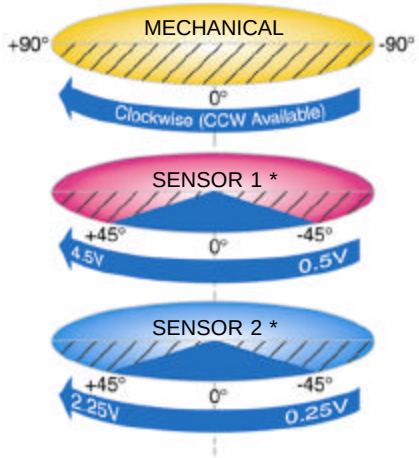


* OTHER OPTIONS AVAILABLE

## 9900 Series Features:

**Rotating magnet/Fixed sensor configuration**
Provides improved accuracy and reliability

**Two independent outputs for redundancy**
Full redundancy assures back-up safety

**Fully programmable**
Outputs; offset, gain, slope and temperature compensation

**Sintered Alnico-8 magnets**
Provide excellent temperature stability and corrosion resistance

**Ratiometric Output**

**Factory programming through connector**
After completion of assembly provides high accuracy

**Sealed construction**
IP66/IP67, 6-pin I/O Interface to Packard Electric Connector

**Extended temperature range**
-40º to +150ºC available optionally

**Return spring (CW standard, CCW optional)**
Eliminates mechanical backlash

**Extended operating life**
35 million operational cycles

## Ordering Information:

990X XXX XX XX

- XX: Temperature Rating: Blank = Standard 85C, HT = 125C
- XX: Spring Return: CW = Clockwise, CCW = Counter Clockwise, NS = No Spring Return
- XXX: Electrical Angle: ie. 090 = ±45°, 120 = ±60°
- 990X: Number of Sensors: 1 = Single Output, 2 = Dual Output

SAMPLE: 9902 090 CW

- CW: Standard 85C
- CW: CW = Clockwise Spring Return
- 090: 90° (±45°) Electrical Angle
- 9902: Dual Output

BEI DUNCAN ELECTRONICS DIVISION
BEI TECHNOLOGIES, INC.
15771 Red Hill Avenue
Tustin, CA 92780-7303
(714) 258-7500 Fax: (714) 258-8120
email: sales@beiduncan.com

ISO9001 Certified / QS9000 Registered

www.beiduncan.com

# Dual Output Hall Effect Sensor
# 9900 Series

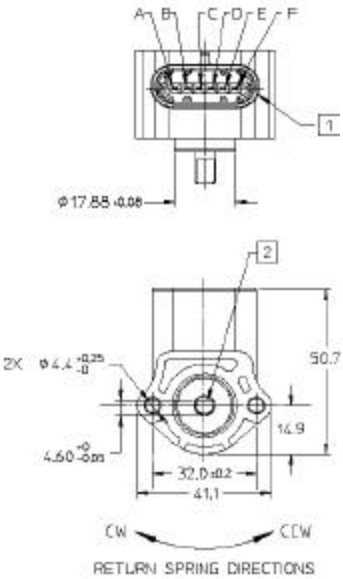


**1** Connector mates with Packard Electric METRI-Pack 150.2 series (pull-to-seat 6 pin sealed connector assemblies) (i.e. 12162261, 12162260 or 12162210)

**2** Shaft flat is shown with:
sensor 1 output at 50% Vs (input voltage).
sensor 2 output at 25% Vs (input voltage).

| CONNECTOR PIN OUTPUT | | |
|---|---|---|
| | SENSOR 1 | SENSOR 2 |
| Vs (input) | F | B |
| GROUND | E | A |
| OUTPUT | C | D |

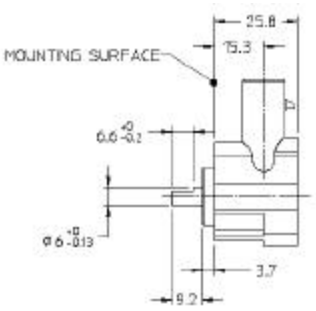


NOTE: All dimensions are shown in millimeters.

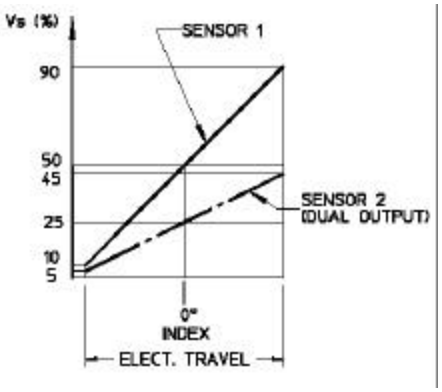


(Typical Sensor Output)

## Mechanical Specifications

| | |
|---|---|
| Mechanical Travel | -90° to +90° (180° total rotation) |
| Frequency Response | 1,000Hz minimum |
| Rotational Torque | 0.025 – 0.110 N-m |
| Weight | 35 grams (approx.) |

## Electrical Specifications

| | |
|---|---|
| Mechanical Input Range | -45° to +45° (other angles available) |
| Input Voltage | 5.0 V ±0.25V DC |
| Input Current | 10mA maximum per output<br>20mA maximum total |
| Sensor 1 Output | 0.5V - 4.5V |
| Sensor 2 Output | 0.25V – 2.25V<br>(Different output voltage range for sensor outputs available as a custom option) |
| Accuracy | ±2.0% of full scale at room temperature<br>±3.0% of full scale over operating temperature range |
| Resolution | Analog (continuous) |

## Environmental Specifications

| | |
|---|---|
| Electromagnetic Compatibility | 100V/meter, 14kHz – 1GHz range |
| Vibration | 10G peak, 20 – 2,000 Hz |
| Shock | 50Gs, half sine pulse, 5 m sec duration |
| Side Load | 1kg for 1 million cycles |
| Operating temperature range | -40°C to +85°C<br>(wider operating temperature –40° to +150°C available as a custom option) |
| Storage temperature range | -55°C to +105°C (-55°C to +165°C) |

© Copyright 2002 BEI Technologies, Inc. Specifications subject to change without notice. BE2023

BEI DUNCAN ELECTRONICS DIVISION
BEI TECHNOLOGIES, INC.
15771 Red Hill Avenue
Tustin, CA 92780-7303
(714) 258-7500 Fax: (714) 258-8120
email: sales@beiduncan.com

ISO9001 Certified / QS9000 Registered

www.beiduncan.com