THIS DRAWING IS UNPUBLISHED. RELEASED FOR PUBLICATION -.- .
© COPYRIGHT - BY TYCO ELECTRONICS CORPORATION. ALL RIGHTS RESERVED.

LOC	DIST
GP	00

REVISIONS

P	LTR	DESCRIPTION	DATE	DWN	APVD
	M1	REVISED PER ECO-06-020813	31OCT06	JDP	CWR

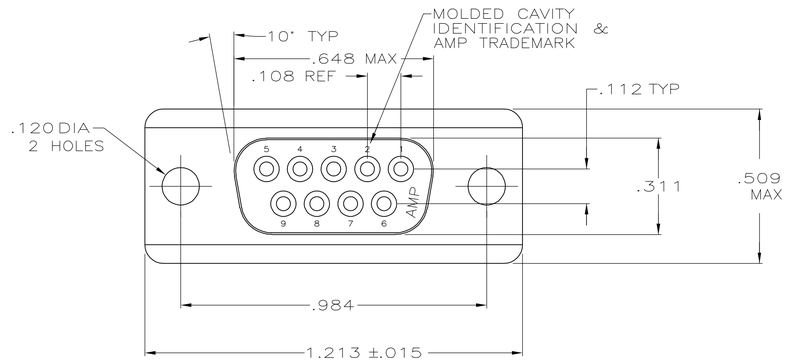

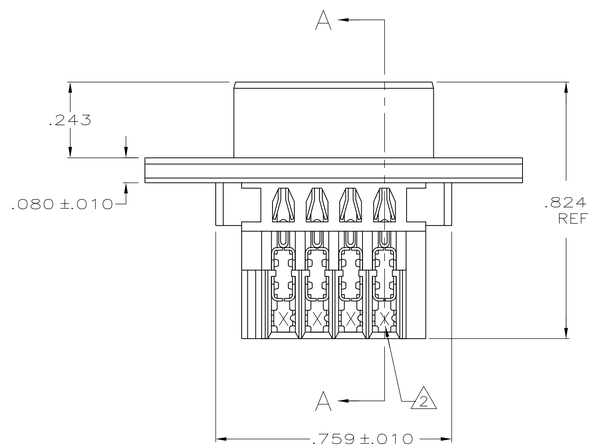

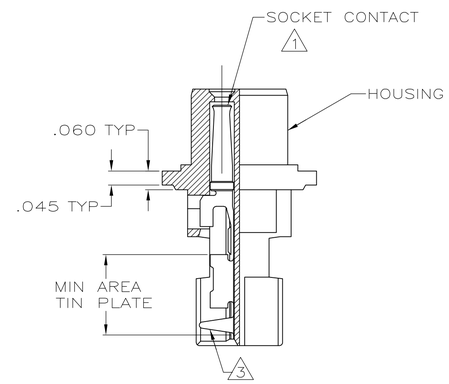

SECTION A–A

1. HOUSING FULLY LOADED WITH CONTACTS.
2. NUMBER ON CONTACT INDICATES WIRE RANGE.
3. CONTACT INSULATION RANGE: .060 MAXIMUM O.D.
4. CONTACTS PLATED .000030 GOLD ON MATING END FOR .100 MIN LENGTH. .000100–.000200 THICK BRIGHT TIN OR BRIGHT TIN–LEAD IN AREA SHOWN. .000050 THICK NICKEL UNDERPLATE ON ENTIRE CONTACT.
5. CONTACTS PLATED WITH GOLD FLASH ON MATING END FOR .100 MIN LENGTH. .000100–.000200 THICK BRIGHT TIN OR BRIGHT TIN–LEAD IN AREA SHOWN. .000030 THICK NICKEL UNDERPLATE ON ENTIRE CONTACT.
6. CONTACTS PLATED .000030 GOLD ON MATING END FOR .100 MIN LENGTH. .000100–.000200 THICK MATTE TIN IN AREA SHOWN. .000050 THICK NICKEL UNDERPLATE ON ENTIRE CONTACT.
7. CONTACTS PLATED WITH GOLD FLASH ON MATING END FOR .100 MIN LENGTH, .000100–.000200 THICK MATTE TIN IN AREA SHOWN. .000030 MIN THICK NICKEL UNDERPLATE ON ENTIRE CONTACT.
8. HOUSING: BLACK THERMOPLASTIC 94V–0 RATED. CONTACTS: PHOSPHOR BRONZE.

	FINISH	2 AWG WIRE RANGE	PART NUMBER
	7	2	#22–26	745201–9
OBSOLETE	6	3	#20–22	745201–8
	6	2	#22–26	745201–7
SUPD BY 745201–3	5	3	#20–22	745201–6
OBSOLETE	5	2	#22–26	745201–5
OBSOLETE	5	1	#26–30	745201–4
OBSOLETE	4	3	#20–22	745201–3
OBSOLETE	4	2	#22–26	745201–2
OBSOLETE	4	1	#26–30	745201–1

THIS DRAWING IS A CONTROLLED DOCUMENT.

DIMENSIONS: INCHES

TOLERANCES UNLESS OTHERWISE SPECIFIED:
0 PLC ± –
1 PLC ± –
2 PLC ± –
3 PLC ± .005
4 PLC ± –
ANGLES ± 2°

MATERIAL 8

FINISH SEE TABLE

DWN L. VARELA – DOCK5 11-15-04
CHK J. GERACE 11-15-04
APVD M. WALMSLEY 11-15-04

PRODUCT SPEC 108-40011
APPLICATION SPEC 114-40002
WEIGHT –

tyco Electronics
Tyco Electronics Corporation
Harrisburg, PA 17105-3608

NAME ASSEMBLY RECEPTACLE, SIZE 1, 9 POSITION, AMPLIMITE

SIZE	CAGE CODE	DRAWING NO	RESTRICTED TO
A1	00779	C-745201	–

CUSTOMER DRAWING | SCALE 4:1 | SHEET 1 OF 1 | REV M1