FIBOX MNX PC

80 X 130 X 100

FIBOX

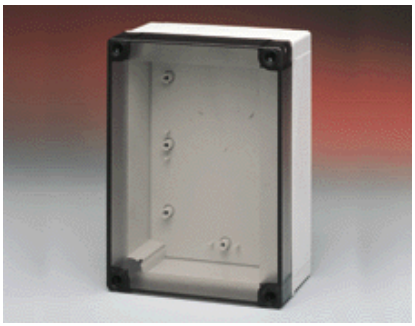

This is a sample photo.

ORDER SYMBOL: PC 100/100 HT

EL.number **EAN:** 6418074022295

Sweden:

Denmark:

Finland: 3420423

INCLUDING:

Enclosure cover with cover screws, body with mounting screws and gasket.

APPROVALS:

USA: NEMA 4, 4X, 12; UL 94-V2

EURO: IP 67; UL 94-V2

OTHERS: IEC 529

FIBOX MNX PC

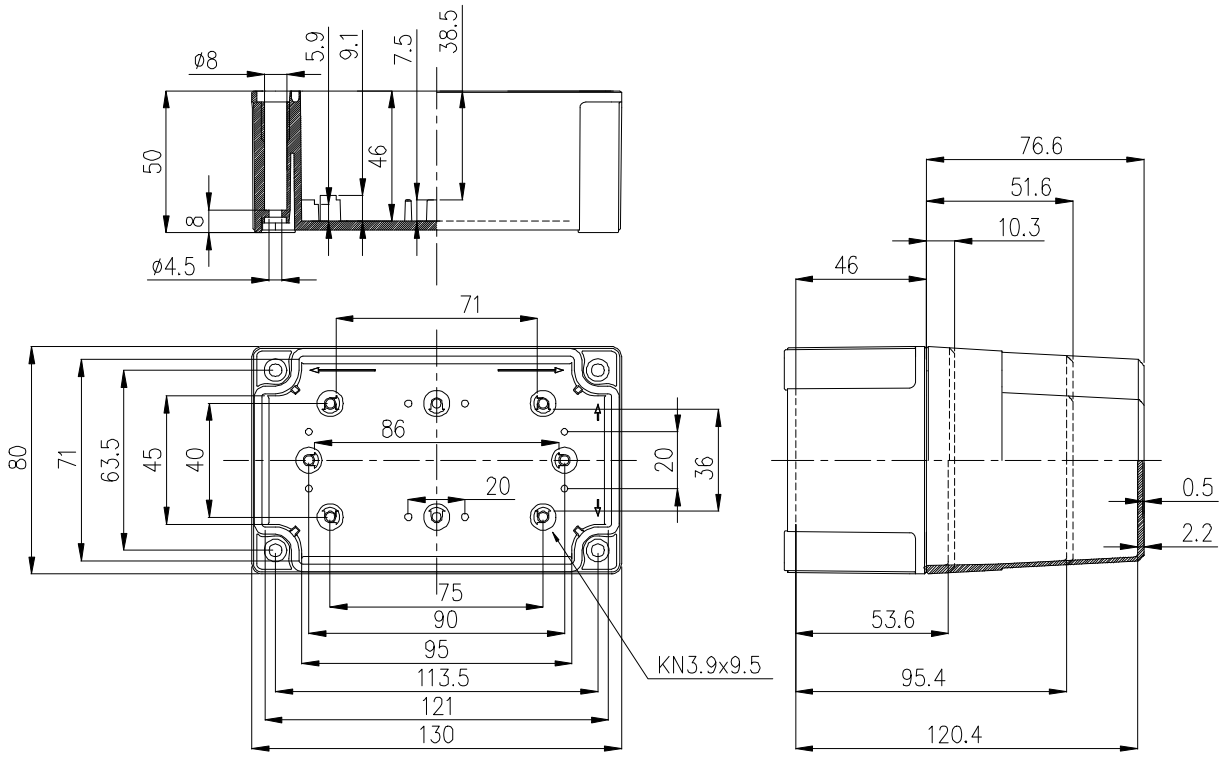

TECHNICAL INFORMATION:

Standard colour:	RAL 7035	Temp.range in cont. use:	Max. +80 °C
Ingress protection:	IP 67 (IEC 529)	Temp. range of material:	- 40 °C - + 120 °C
Flame resistance:			

ACCESSORIES

Fastening lug	FP 22046	DIN-Rail	MIV 10
Grey Screw set	MBS HH	DIN-Rail	MIV 15
Grey Screw set	MBS HL	DIN-Rail	MIV 20
Grey Screw set	MBS LH	DIN-Rail	MIV 5
Grey Screw set	MBS LL		
DIN-Rail	MIN 10		
DIN-Rail	MIN 15		
DIN-Rail	MIN 20		
DIN-Rail	MIN 5		

(c) FIBOX Oy Data subject to change without notice.