THIS DRAWING IS UNPUBLISHED. RELEASED FOR PUBLICATION - , - .
© COPYRIGHT - By - ALL RIGHTS RESERVED.

LOC	DIST
GP	00

REVISIONS

P	LTR	DESCRIPTION	DATE	DWN	APVD
	A2	REVISED PER ECO-11-004835	11MAR11	RK	HMR

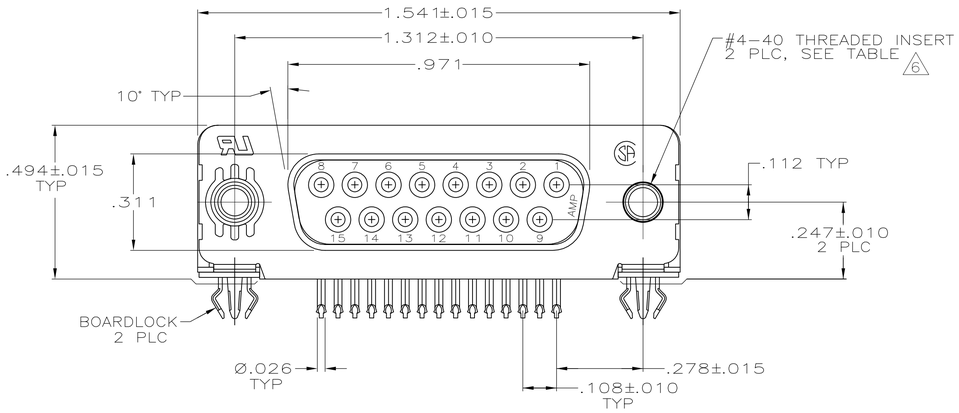

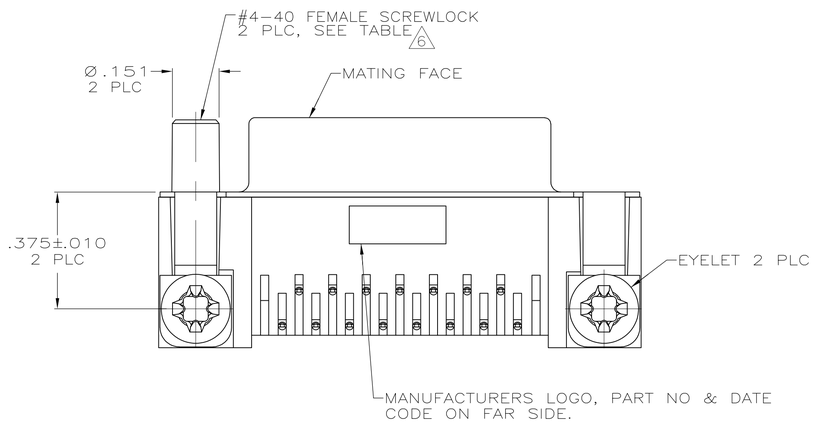

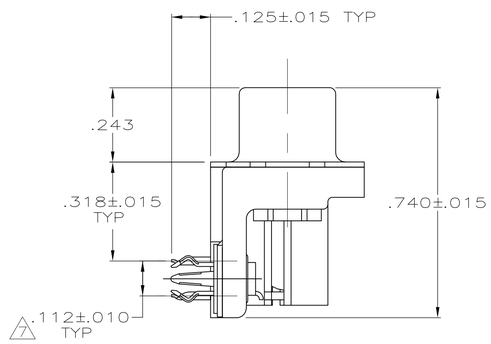

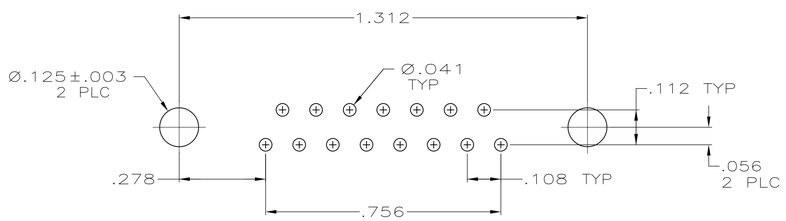

PC BOARD MOUNTING DIMENSIONS

1. CONNECTOR MATES WITH ANY 25 POSN PLUG IN AMPLIMITE SERIES.

2. MOLDED PARTS: FLAME RETARDANT 94V-0 RATED THERMOPLASTIC, BLACK.
SHELL: CARBON STEEL.
CONTACTS: PHOSPHOR BRONZE.
EYELETS: BRASS.
SCREWLOCKS: ZINC.
INSERTS: ZINC.
BOARDLOCKS: COPPER ALLOY.

3. SHELL: .000100 MIN TIN OVER .000050 MIN COPPER.
CONTACTS: SEE TABLE.
EYELETS: .000100 MIN TIN OVER COPPER FLASH.
BOARDLOCKS: .000150 MIN TIN OVER .000050 MIN NICKEL.
INSERTS AND SCREWLOCKS: CLEAR CHROMATE.

4. GOLD FLASH FOR A DISTANCE OF .100 MIN FROM MATING END, .000100 MIN TIN ON TERMINATION END, ALL OVER .000050 MIN NICKEL ON ENTIRE CONTACT.

5. .000030 GOLD FOR A DISTANCE OF .100 MIN FROM MATING END, .000100 MIN TIN ON TERMINATION END, ALL OVER .000050 MIN NICKEL ON ENTIRE CONTACT.

6. SCREWLOCKS & INSERTS WILL WITHSTAND 6 IN-LBS TORQUE & 20 LBS PULL OUT FORCE FROM MATING FACE SIDE.

7. DIMENSION APPLIES FROM CENTER OF CONTACTS.

8. SPECIAL PACKAGING REQUIRED.

9. OBSOLETE PARTS: OBSOLETE CIS STREAMLINING PER D.RENAUD/D.SINISI

	MOUNTING HARDWARE	CONTACT FINISH	PART NUMBER
9 OBSOLETE	THREADED INSERTS	5	8 ~~1-5747845-1~~
	FEMALE SCREWLOCKS	5	5747845-6
	FEMALE SCREWLOCKS	4	5747845-5
	THREADED INSERTS	5	5747845-4
	THREADED INSERTS	4	5747845-3
OBSOLETE	.125 DIA HOLES	5	5747845-2

THIS DRAWING IS A CONTROLLED DOCUMENT.

DIMENSIONS: INCHES

TOLERANCES UNLESS OTHERWISE SPECIFIED:
0 PLC ± -
1 PLC ± -
2 PLC ± -
3 PLC ± .005
4 PLC ± -
ANGLES ± 2°

MATERIAL 2 FINISH 3

DWN 04-05-05 L. VARELA - DOCKS
CHK 04-05-05 S. BOLASH
APVD 04-05-05 M. WALMSLEY
PRODUCT SPEC 108-40025
APPLICATION SPEC 114-40010
WEIGHT -

TE Connectivity

NAME RECEPTACLE ASSEMBLY, SIZE 2, 15 POSITION, RIGHT ANGLE, FRONT METAL SHELL, .318 SERIES, .026 DIA POSTS, BOARDLOCKS, AMPLIMITE HD-20

SIZE	CAGE CODE	DRAWING NO	RESTRICTED TO
A1	00779	C-5747845	-

CUSTOMER DRAWING SCALE 4:1 SHEET 1 OF 1 REV A2