THIS DRAWING IS UNPUBLISHED. RELEASED FOR PUBLICATION -,- .
© COPYRIGHT - BY TYCO ELECTRONICS CORPORATION. ALL RIGHTS RESERVED.

LOC	DIST
G	14

REVISIONS

P	LTR	DESCRIPTION	DATE	DWN	APVD
	T2	REV PER ECR 08-015783	24JUN08	JR	TM

AMP WIRE RANGE	MILITARY WIRE RANGE
26-22 AWG STRANDED	26-24 AWG STRANDED

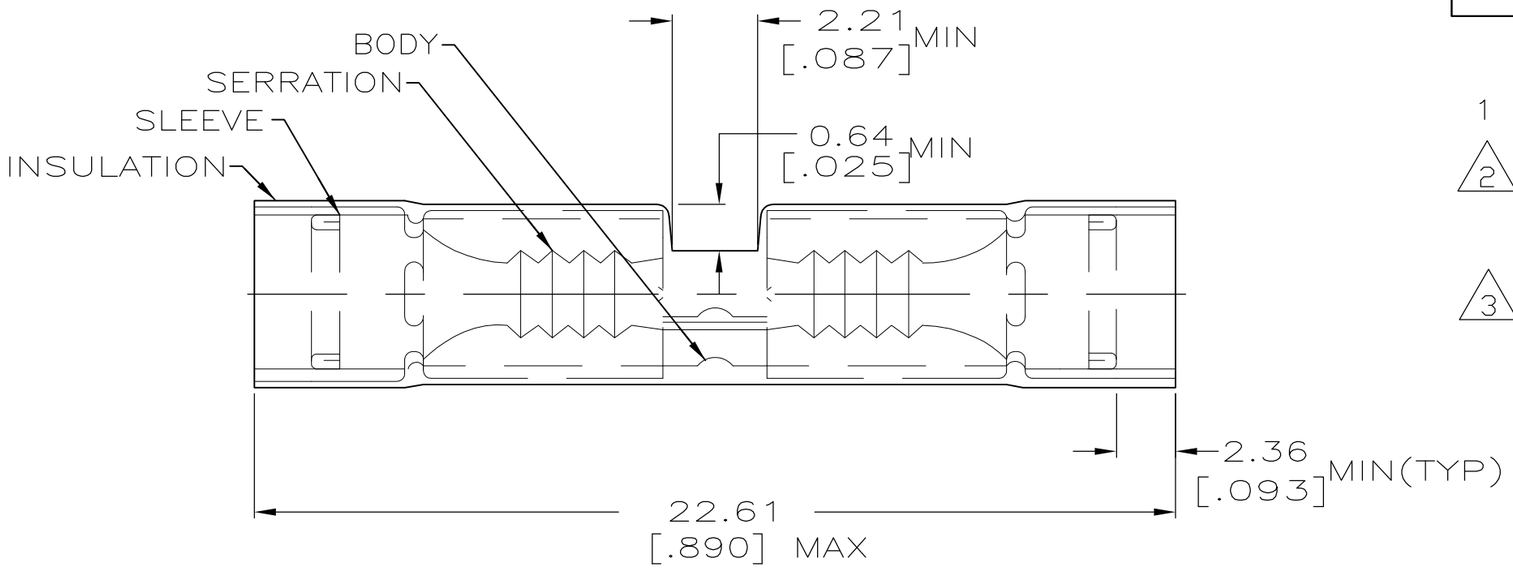

1 WIRE INSULATION DIA 1.27-2.08 [.050-.082]

2 MATERIAL, BODY - COPPER PER ASTM B-152
SLEEVE - COPPER PER ASTM B-152
INSULATION - NYLON -COLOR - YELLOW

3 PRELIMINARY - NOT FOR PRODUCTION

MILITARY P/N & CLASS PER MIL-T-7928	QTY	PACKAGE TYPE	PART NO
--	25	LOOSE PIECE, BOX	8-323994-3
--	50	LOOSE PIECE, BOX	8-323994-2
--	100	LOOSE PIECE, BOX	3 8-323994-1
--	50	LOOSE PIECE	2-323994-2
--	4000	ON TAPE, REEL	2-323994-1
26-24 M7928/5-1 CLASS 1 & 2	50	LOOSE PIECE	323994

AMP INCORPORATED
CUSTOMER SERVICE SYSTEMS

FOR ADDITIONAL PRODUCT INFORMATION OR COPIES OF DRAWINGS AND TECHNICAL DOCUMENTS	PRODUCT INFORMATION CENTER 1-800-522-6752
FOR APPLICATION TOOLING INFORMATION	TOOLING ASSISTANCE CENTER 1-800-722-1111
FOR ORDER ENTRY	1-800-526-5142

THIS DRAWING IS A CONTROLLED DOCUMENT FOR AMP INCORPORATED. IT IS SUBJECT TO CHANGE AND THE CONTROLLING ENGINEERING ORGANIZATION SHOULD BE CONTACTED FOR THE LATEST REVISION.

MAX RECOMMENDED OPERATING TEMPERATURE: 105°C [221°F]

VOLTAGE RATING: -

CIRCULAR MIL AREA: 0.10-0.41mm² [202-810] STRANDED

THIS DRAWING IS A CONTROLLED DOCUMENT.

DIMENSIONS: MM [INCHES]

TOLERANCES UNLESS OTHERWISE SPECIFIED:
0 PLC ± -
1 PLC ± -
2 PLC ± 0.20[.008]
3 PLC ± -
4 PLC ± -
ANGLES ± -

MATERIAL 2

FINISH TIN PL PER ASTM B-545

DWN	S.S. GOULDEN	9-28-93
CHK	R. HERSEY	9-28-93
APVD	M. ELLIS	9-28-93
PRODUCT SPEC	—	
APPLICATION SPEC	—	
WEIGHT	—	

Tyco Electronics
Tyco Electronics Corporation
Harrisburg, PA 17105-3608

NAME
SPLICE, BUTT, PIDG,
WIRE SIZE 26-22 AWG
-

SIZE	CAGE CODE	DRAWING NO	RESTRICTED TO
A3	00779	C-323994	—

CUSTOMER DRAWING | SCALE NTS | SHEET 1 OF 1 | REV T2