Alle Rechte vorbehalten/ *All rights reserved*

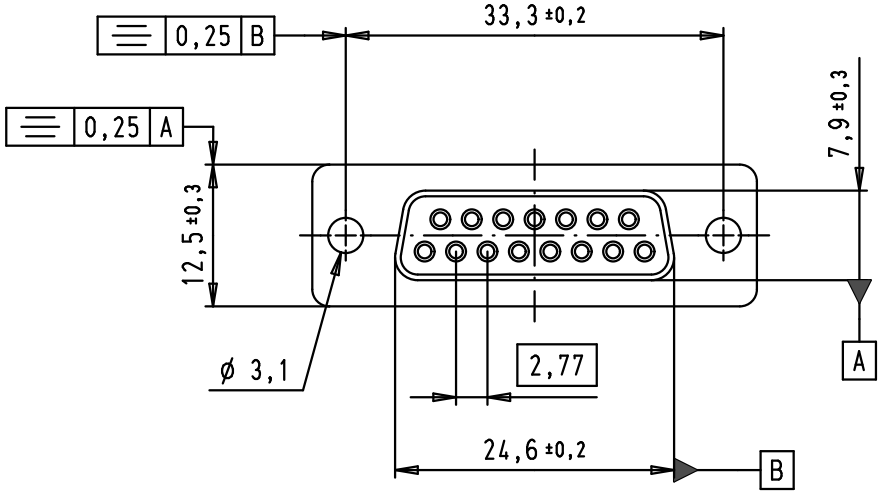

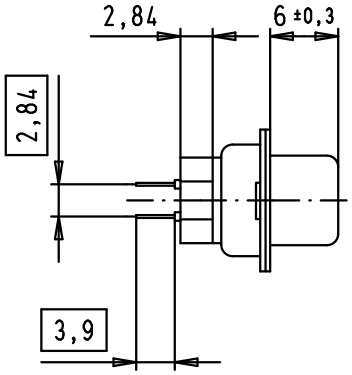

SPECIFICATIONS

FREQUENCY (MHz)	ATTENUATION (dB)
5	0,5
10	1
50	3,5
100	4
500	5
1000	5,5

Operating voltage	< 250 V AC
Working current	< 7,5 A
Insulation resistance	> 1GΩ
Contact resistance	< 15 mΩ
Dielectric withstanding voltage	500 V AC / minute

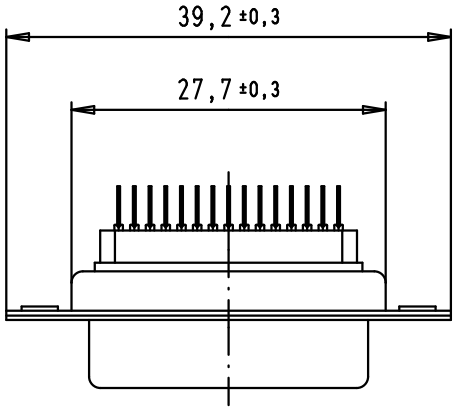

PCB layout, component side

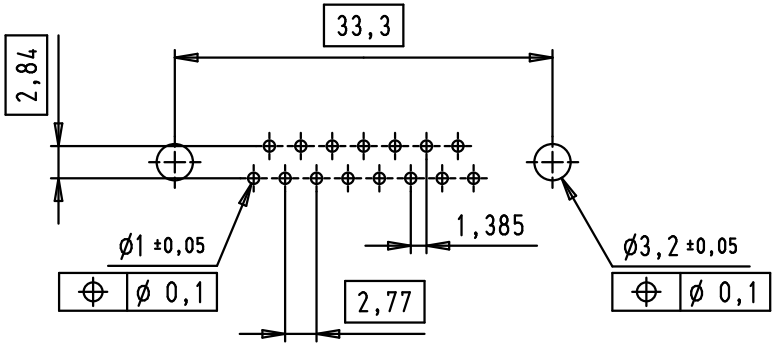

09 64 212 7800	Au Flash
Part number	Performance level

				Dat.	Name
			Detail.	11/06/09	PK
			Insp.		
			Stand.		
EC00332	11/06/09	PK			
Mod.	Dat.	Name			

All Dim. in mm
Orig. Size DIN A 4

D-Sub, female, straight, 15 poles, tin plated shell, solder pins, ferrite filter

Maßstab/ *Scale* 1,5:1

HARTING EURL
F-95972 Paris

TB 09 64 212 7800

Sub.

Blatt/ *Page* 1/1