Alle Rechte vorbehalten/ *All rights reserved*

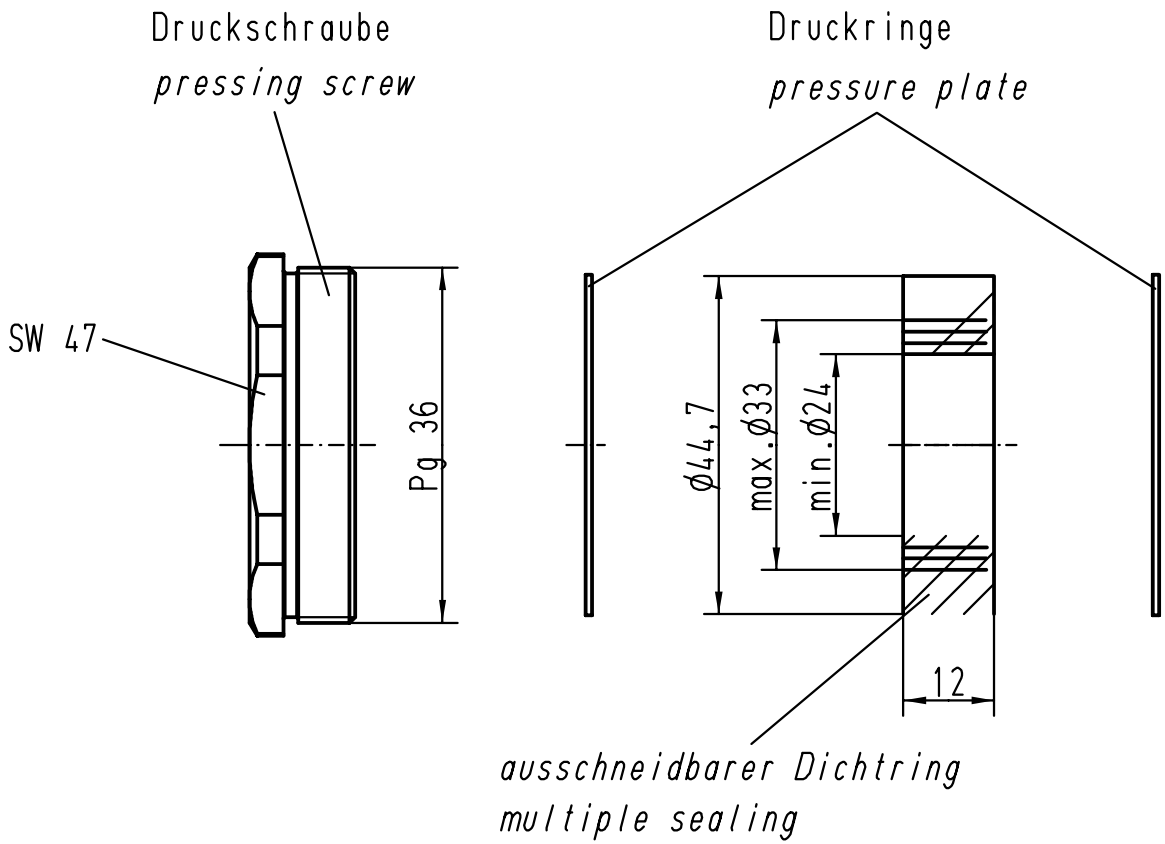


| | | | | | | |
|---|---|---|---|---|---|---|
| All Dimensions in mm<br>Original Size DIN A 4 | | | Techn. Character. | | | Nicht tolerierte Masse/ *Free size tolerances* |
| | | | | Dat. | Name | Massstab/ *Scale* |
| | | | Detail. | 7.12.98 | Kö | 1:1 |
| | | | Insp. | | SDT. | |
| | | | Stand. | | | |
| | | | HARTING KGaA<br>D-32339 ESPELKAMP | | | Verschraubung Metall/<br>cable sealing metal<br>für Standard-Gehäuse / for standard housings |
| 24863 | | | | | | TB 09 00 000 5018 |
| Mod. | Dat. | Name | | | | Sub. TB 09 00 000 501. v. 1.2.93 |
| | | | | | | Blatt/ *page* |