Dec.1.2017 Copyright 2017 HIROSE ELECTRIC CO., LTD. All Rights Reserved.

	COUNT	DESCRIPTION OF REVISIONS	BY	CHKD	DATE		COUNT	DESCRIPTION OF REVISIONS	BY	CHKD	DATE
△					. .	△					. .
△					. .	△					. .
△					. .	△					. .

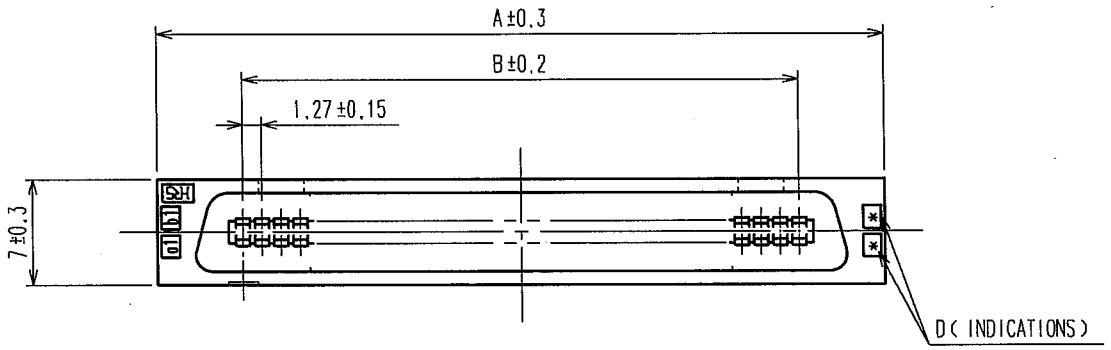

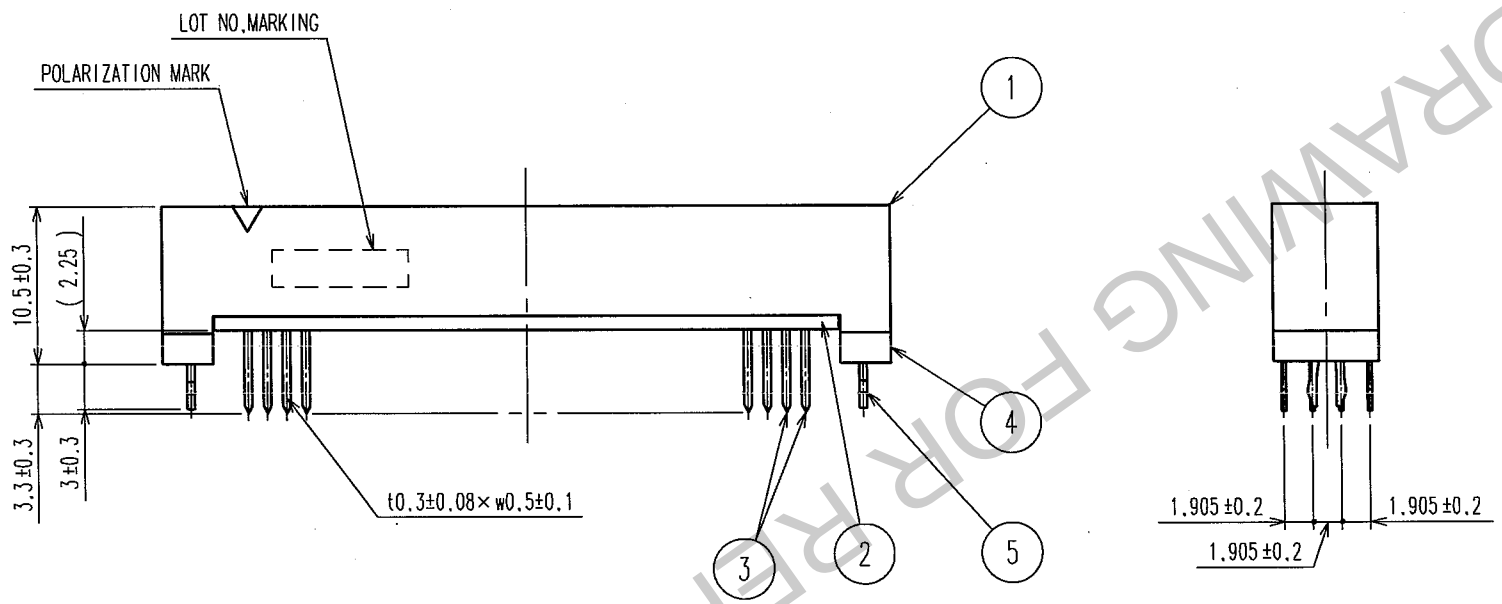

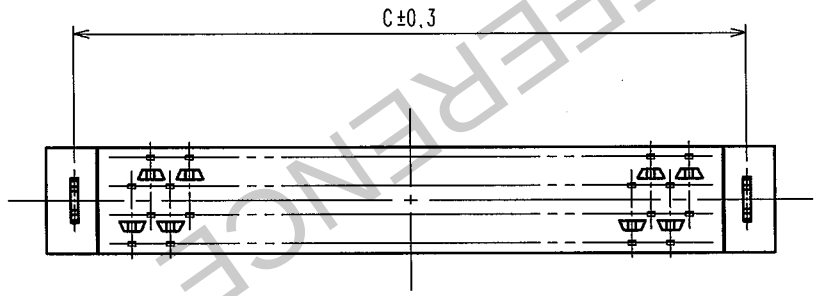

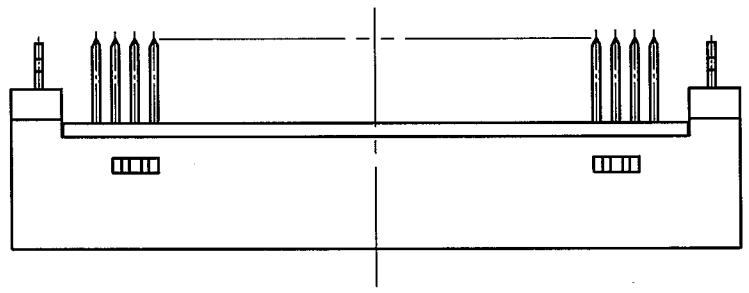

RECOMMENDEND PC BOARD HOLE PATTERN(MOUNTING SIDE)

t=1.6

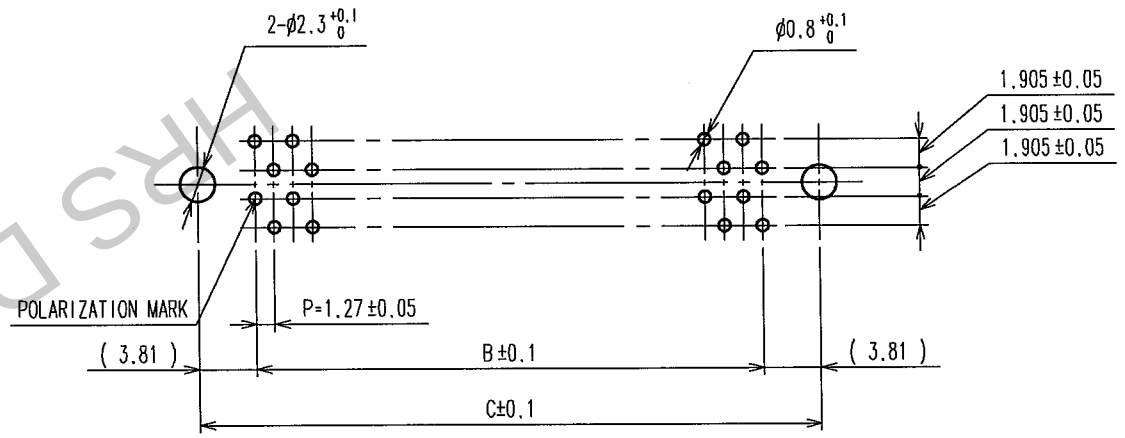

PART No.	CODE No.	2	A	B	C	D
FX2CA2-20P-1.27DSAL(71)	CL572-2371-8-71	20	22.75	11.43	19.05	10
FX2CA2-32P-1.27DSAL(71)	CL572-2372-0-71	32	30.37	19.05	26.67	16
FX2CA2-40P-1.27DSAL(71)	CL572-2373-3-71	40	35.45	24.13	31.75	20
FX2CA2-52P-1.27DSAL(71)	CL572-2374-6-71	52	43.07	31.75	39.37	26
FX2CA2-60P-1.27DSAL(71)	CL572-2375-9-71	60	48.15	36.83	44.45	30
FX2CA2-68P-1.27DSAL(71)	CL572-2376-1-71	68	53.23	41.91	49.53	34
FX2CA2-80P-1.27DSAL(71)	CL572-2377-4-71	80	60.85	49.53	57.15	40
FX2CA2-100P-1.27DSAL(71)	CL572-2378-7-71	100	73.55	62.23	69.85	50
FX2CA2-120P-1.27DSAL(71)	CL572-2379-0-71	120	86.25	74.93	82.55	60

NOTES 1. THE DIMENSIONS IN PARENTHESES ARE FOR REFERENCE.
2 NUMBER OF PIN.

NO.	MATERIAL	FINISH, REMARKS	NO.	MATERIAL	FINISH, REMARKS
5	PHOSPHOR BRONZE	TIN-PLATING	3	PHOSPHOR BRONZE	CONTACT AREA:GOLD 0.2μm min
4	POLYAMIDE	BLACK UL94V-0			DIP AREA:TIN-PLATING 2μm min
1,2	POLYAMIDE	BLACK UL94V-0			UNDER PLATING:NICKEL 2μm min

CODE NO.(OLD)	DRAWN	DESIGNED	CHECKED	APPROVED	RELEASED
CL	I.OKAYAMA 04.06.02	K.NAKAMURA 04.06.02	H.OKAWA 04.06.09	H.OKAWA 04.06.09	. .

SCALE FREE
UNITS mm

DRAWING NO. EDC3-083056-21

HRS HIROSE ELECTRIC CO., LTD

PART NO. FX2CA2-**P-1.27DSAL(71)

CODE NO. CL572

1/1

TO
PCK

HRS DRAWING FOR REFERENCE