NO	DESCRIPTION	DATE
1	ADD CABLE ATTACHMENT DEL CONTACT:SOLDER/CRIMP DEL CABLE RETENTION NICKEL 100μ" MIN. ——→ NICKEL	06.30.09'
2	ADD REMARK	11.25.10'
3	WORKING VOLTAGE ——→ VOLTAGE RATING DEL PROOF VOLTAGE;SOLDER/	01.20.14'

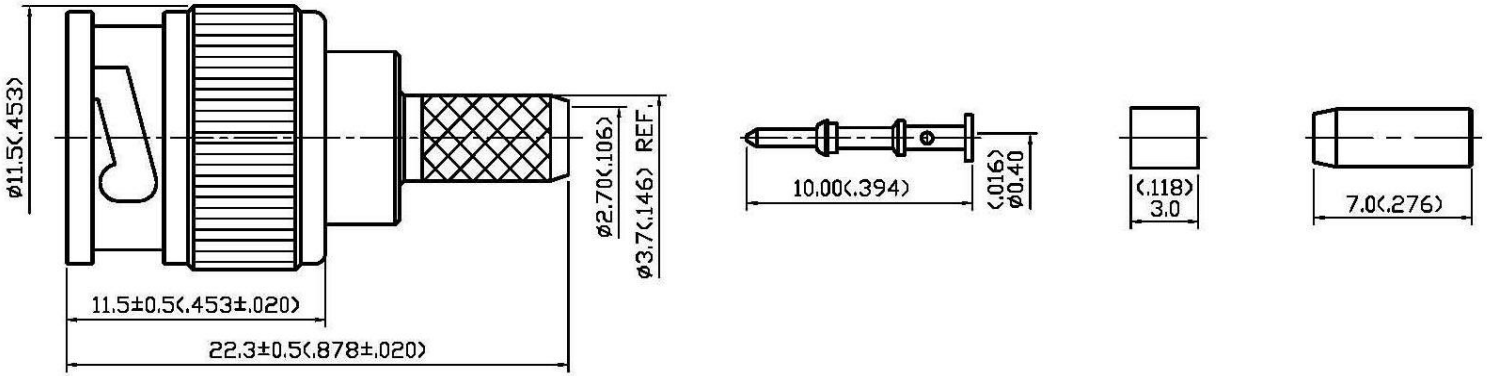

01/20/2014

1.0 ELECTRICAL

1.1 FREQUENCY RANGE: DC–2 GHz
1.2 NOMINAL IMPEDANCE: 75 OHMS
1.3 VOLTAGE RATING: 300 VOLTS MAX. 3
1.4 VSWR: 1.1 MAX. @750 MHz
1.16 MAX. @1 GHz

2.0 MATERIALS

2.1 BODIES: BRASS PER JIS–C3604
2.2 CENTER CONTACT: BRASS PER JIS–C3604
2.3 INSULATION: TEFLON PER ASTM D1457 AND ASTM D1710
2.4 CRIMP FERRULE: BRASS PER JIS–C2700

3.0 FINISHES AND OTHERS

3.1 SEE BELOW TABLE FOR DETAILS.

4.0 MECHANICAL

4.1 FOR USE WITH BELDEN 735A OR SIMILAR STYLE CABLE
4.2 CABLE ATTACHMENT: OUTER: SOLDER, INNER: SOLDER/CRIMP 1 3
4.3 CRIMP SIZE REQUIRED: CONTACT: 0.71(.028) SQ. CRIMP TOOL
FERRULE: 4.6(.181) HEX. CRIMP TOOL
3.5(.138) HEX. CRIMP TOOL

5.0 ENVIRONMENTAL

5.1 OPERATING TEMPERATURE RANGE: –40° C TO +85° C

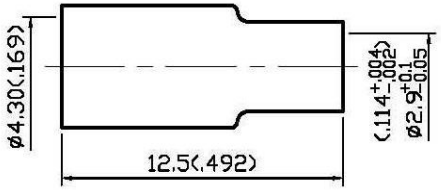

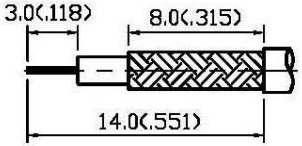

STRIPPING DIMENSION
SCALE 3:1

11	CRIMP FERRULE	BRASS	1	NICKEL	1
10	SLEEVE	BRASS	1	NICKEL	1
9	BUSHING	TEFLON	1	NONE	
8	CENTER CONTACT	BRASS	1	GOLD	
7	INSULATION	TEFLON	1	NONE	
6	WASHER	BRASS	1	NICKEL	1
5	SPRING WASHER	SK–5	1	NICKEL	1
4	WASHER	BRASS	1	NICKEL	1
3	GASKET	SILICONE	1	RED	
2	BODY	BRASS	1	NICKEL 100μ" MIN.	
1	SHELL	BRASS	1	NICKEL 100μ" MIN.	
NO	*DESCRIPTION*	*MATERIAL*	*Q'TY*	*FINISH*	

APPROVED by _____ DATE: _____

DESCRIPTION	MINI BNC STRAIGHT PLUG CRIMP								
製圖	DRAWN *Yoko*	TOLERANCE		品名 TITLE	56–01 T.G.N \ROHS COMPLIANT 179U (75Ω)	日期	DATE 04.11.07'	版次	REV. A–3
		.X	±0.2						
檢圖	CHECK *Arc*	.XX	±0.1	單位	UNIT mm(in)	DWG.NO.	56–0003		
		.XXX	±0.05	比例	SCALE 4:1				
認定	APPROVAL *Angela*	ANGLE	±5°						