DRAWING FOR REFERENCE: This is subject to change without notice
05/31/2014

HRS DRAWING FOR REFERENCE

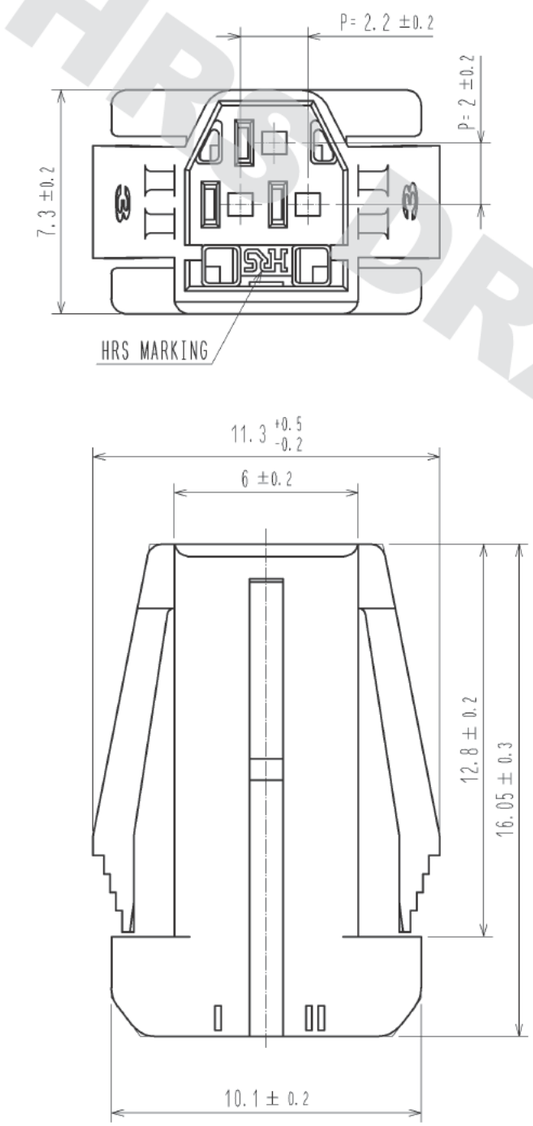

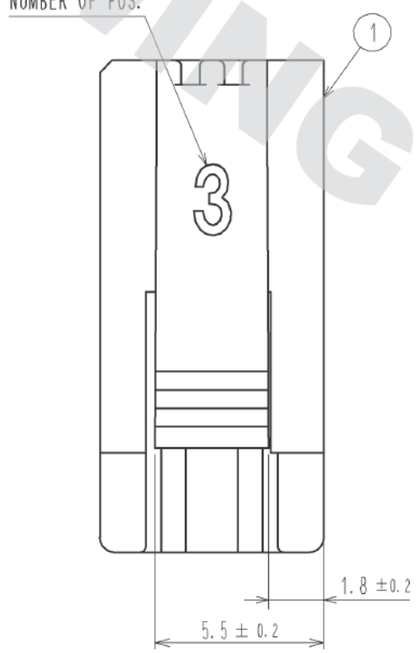

7 MATING FIGURE (PANEL MOUNTED)

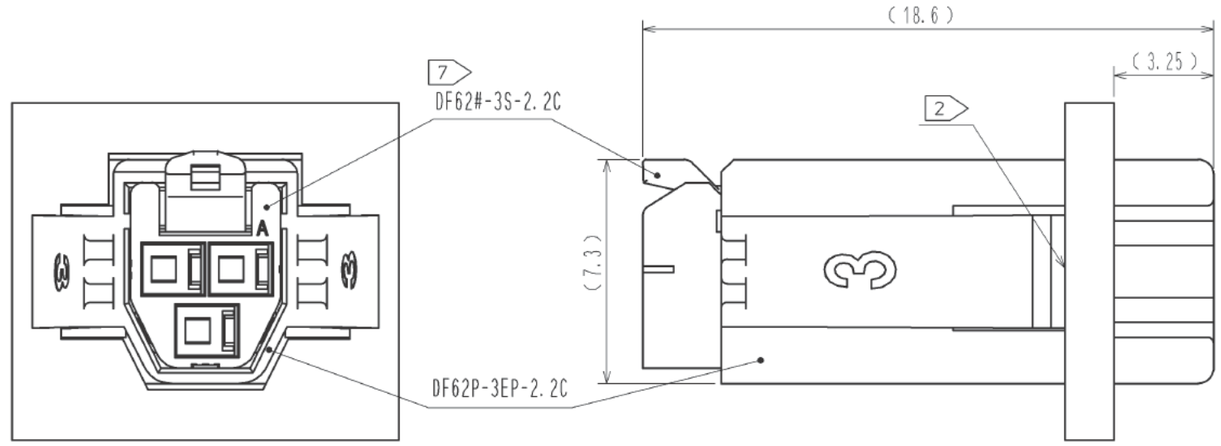

3 4 RECOMMENDED PANEL CUTOUT DIMENSION

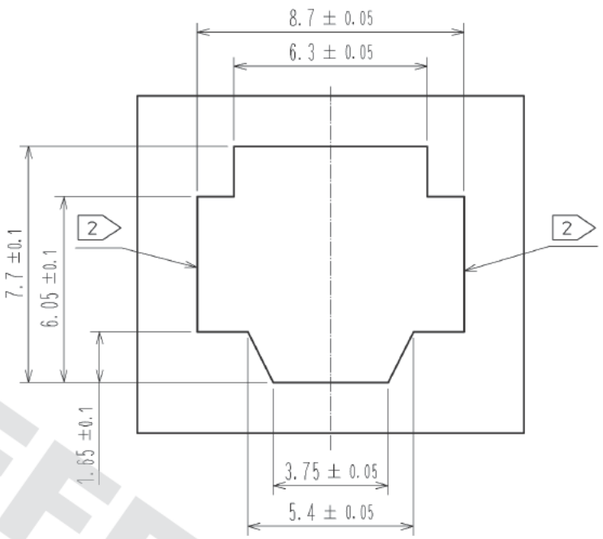

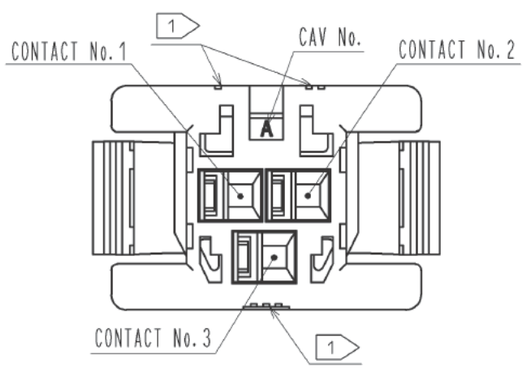

1 FIGURE-1 CONTACT No. MARKING (10:1)

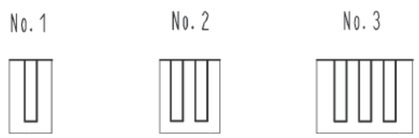

NOTE.
1. MARKINGS AT THE INDICATED POSITIONS ARE CONTACT NO. MARKING. AND SHAPES ARE SHOWN IN FIGURE-1.
2. PLEASE USE THE NON-RADIUS SIDE FOR THE PANEL HOOKING AREA.
3. APPLICABLE PANEL THICKNESSING IS 2.3 TO 0.5mm.
4. CONSULT HIROSE FOR THE OTHER PANEL CUTOUT DESIGNS THAN THE RECOMMENDED ONE.
5. PER PACK : 100 PIECES.
6. THE DIMENSIONS IN PARENTHESIS ARE FOR REFERENCE.
7. THIS FIGURE SHOWS THE MATED CONDITION WITH DF62B-3S-2.2C.

NO.	MATERIAL	FINISH , REMARKS	NO.	MATERIAL	FINISH , REMARKS
			1	PBT	UL94V-0(BLACK)

UNITS mm	SCALE 5 : 1	COUNT	DESCRIPTION OF REVISIONS	DESIGNED	CHECKED	DATE

HRS HIROSE ELECTRIC CO., LTD.

APPROVED	: KI. AKIYAMA	13.12.26	DRAWING NO.	EDC3-349136-00
CHECED	: OM. MIYAMOTO	13.12.26	PART NO.	DF62P-3EP-2.2C
DESIGNED	: TH. YOSHIZAWA	13.12.26	CODE NO.	CL544-0544-4-00
DRAWN	: MI. SAKIMURA	13.12.20		1/1