HRS DRAWING FOR REFERENCE

DRAWING FOR REFERENCE: This is subject to change without notice
05/31/2014

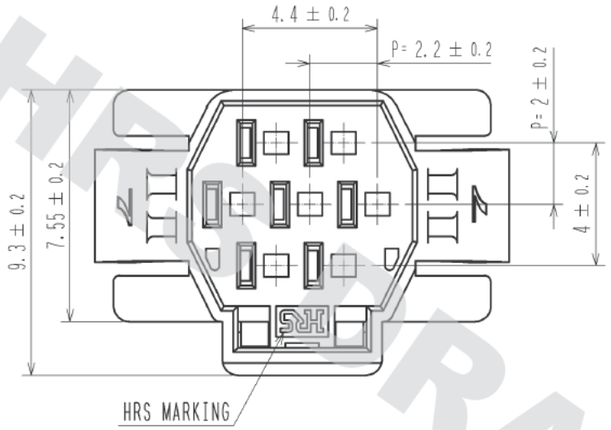

7 MATING FIGURE (PANEL MOUNTED)

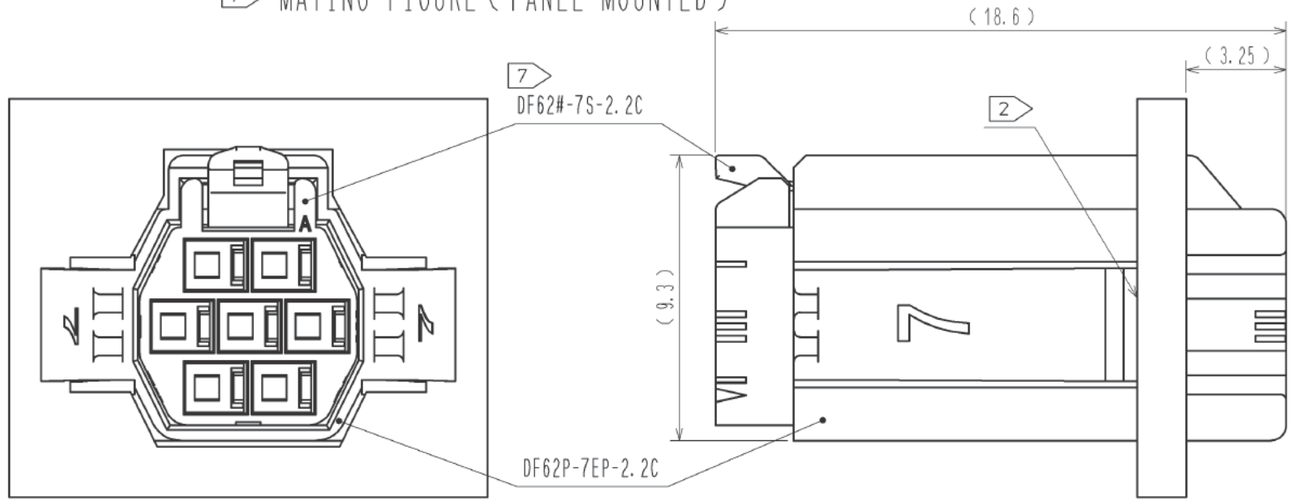

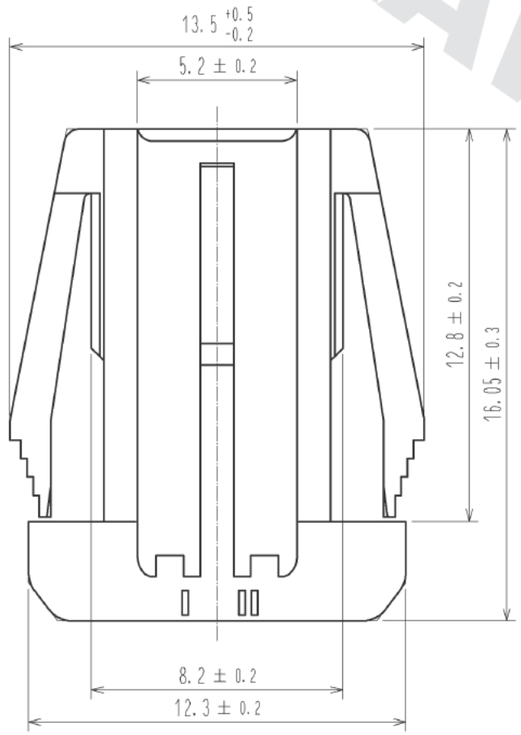

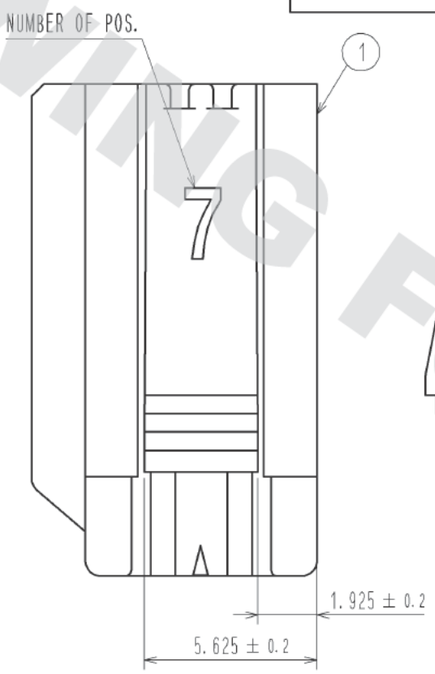

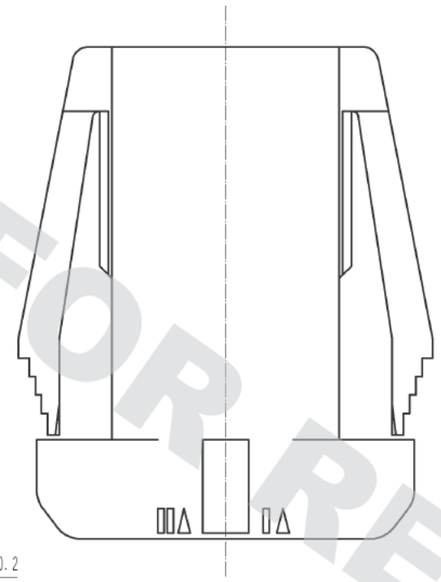

3 4 RECOMMENDED PANEL CUTOUT DIMENSION

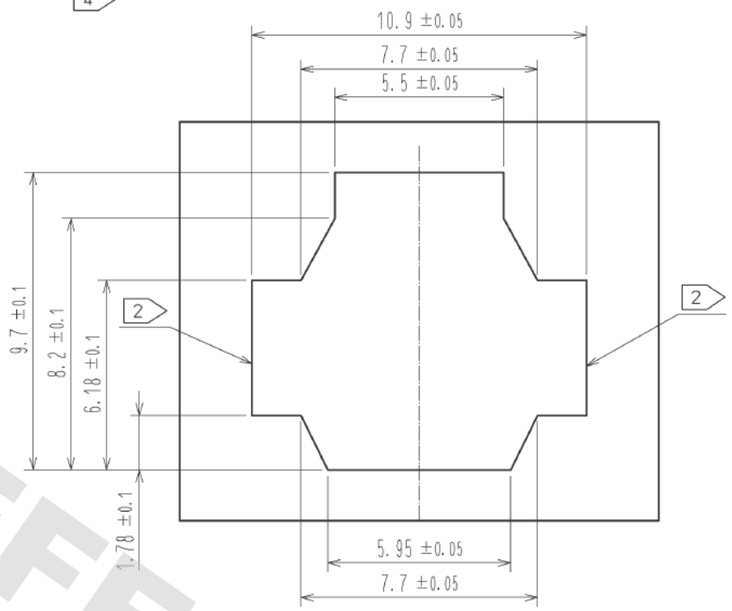

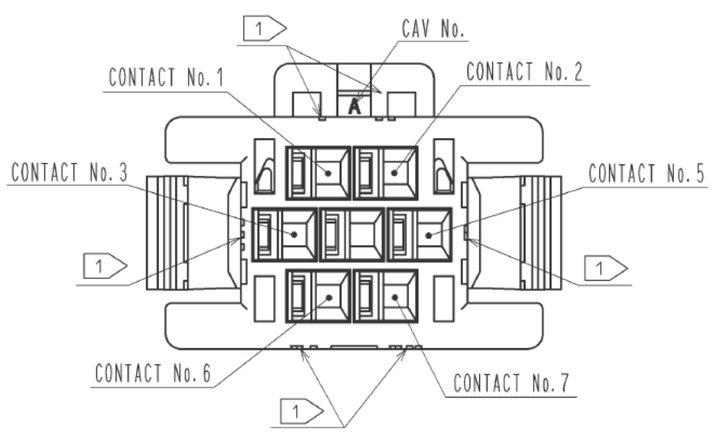

1 FIGURE-1 CONTACT No. MARKING (10:1)

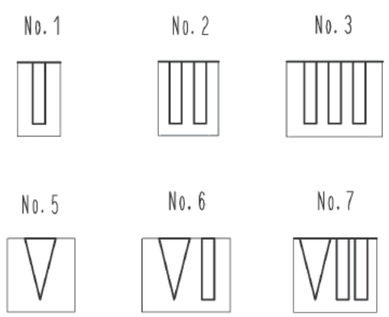

NOTE. 1 MARKINGS AT THE INDICATED POSITIONS ARE CONTACT NO. MARKING. AND SHAPES ARE SHOWN IN FIGURE-1.
2 PLEASE USE THE NON-RADIUS SIDE FOR THE PANEL HOOKING AREA.
3 APPLICABLE PANEL THICKNESSING IS 2.3 TO 0.5mm.
4 CONSULT HIROSE FOR THE OTHER PANEL CUTOUT DESIGNS THAN THE RECOMMENDED ONE.
5. PER PACK : 100 PIECES.
6. THE DIMENSIONS IN PARENTHESIS ARE FOR REFERENCE.
7 THIS FIGURE SHOWS THE MATED CONDITION WITH DF62B-7S-2.2C.

NO.	MATERIAL	FINISH . REMARKS	NO.	MATERIAL	FINISH . REMARKS
			1	PBT	UL94V-0(BLACK)

UNITS mm	SCALE 5 : 1	COUNT	DESCRIPTION OF REVISIONS	DESIGNED	CHECKED	DATE

HRS HIROSE ELECTRIC CO., LTD.

APPROVED	: KI. AKIYAMA	13.12.26	DRAWING NO.	EDC3-349140-00
CHECED	: OM. MIYAMOTO	13.12.26	PART NO.	DF62P-7EP-2.2C
DESIGNED	: TH. YOSHIZAWA	13.12.26	CODE NO.	CL544-0548-5-00
DRAWN	: MI. SAKIMURA	13.12.25		1/1