THIS DRAWING IS UNPUBLISHED. RELEASED FOR PUBLICATION -,- .
© COPYRIGHT - By - ALL RIGHTS RESERVED.

LOC	DIST
AD	00

REVISIONS

P	LTR	DESCRIPTION	DATE	DWN	APVD
	R2	REVISED PER ECO-11-004587	11MAR11	RK	HMR

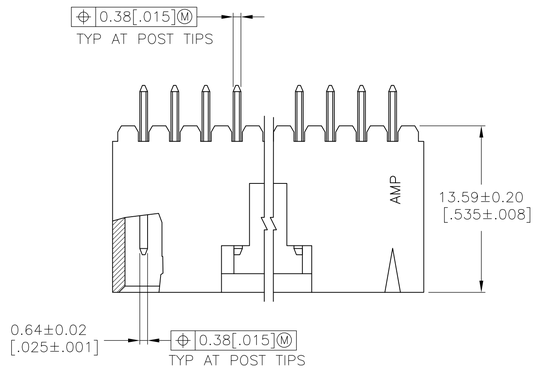

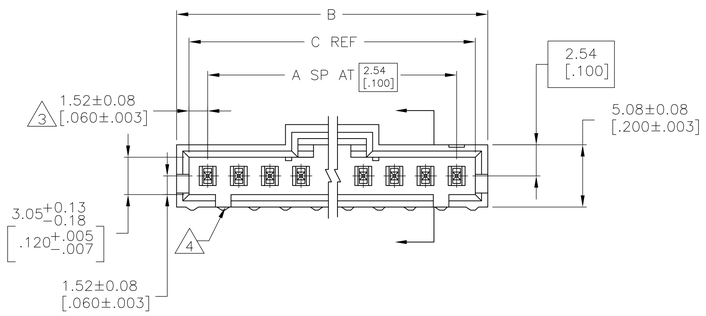

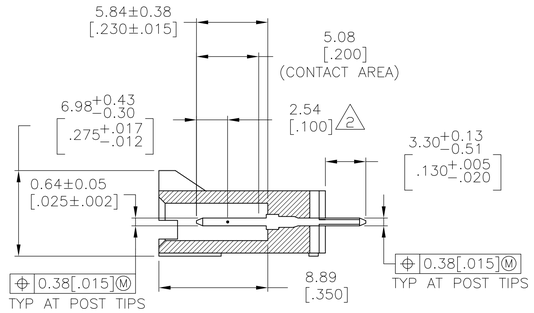

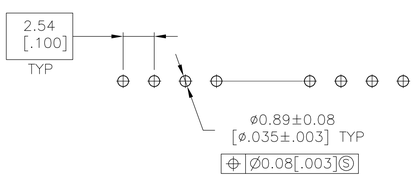

RECOMMENDED HOLE LAYOUT

1. .00038[.000015] GOLD IN THE CONTACT AREA, .00254[.000100] MATTE TIN-LEAD ON REMAINDER OF CONTACT, ALL OVER .00127[.000050] NICKEL.
2. POINT OF MEASUREMENT FOR PLATING THICKNESS.
3. THE NOTED DIMENSIONS APPLY AT THE INTERSECTION OF THE POST AND THE HOUSING.
4. ON ASSEMBLIES WITH FOUR OR MORE POSITIONS, TWO POLARIZATION SLOTS. ON ASSEMBLIES WITH TWO OR THREE POSITIONS, ONE POLARIZATION SLOT.
5. OBSOLETE PARTS: OBSOLETE CIS STREAMLINING PER D.RENAUD/D.SINISI

	C	B	A	NO. OF POSN	PART NO.
5 SUPERCEDED BY 7-104910-4	~~64.01 [2.520]~~	~~66.04 [2.600]~~	~~24~~	~~25~~	~~2-103638-4~~
5 SUPERCEDED BY 7-104910-3	~~61.47 [2.420]~~	~~63.50 [2.500]~~	~~23~~	~~24~~	~~2-103638-3~~
5 SUPERCEDED BY 7-104910-2	~~58.93 [2.320]~~	~~60.96 [2.400]~~	~~22~~	~~23~~	~~2-103638-2~~
	56.39 [2.220]	58.42 [2.300]	21	22	2-103638-1
5 SUPERCEDED BY 7-104910-0	~~53.85 [2.120]~~	~~55.88 [2.200]~~	~~20~~	~~21~~	~~2-103638-0~~
	51.31 [2.020]	53.34 [2.100]	19	20	1-103638-9
5 SUPERCEDED BY 6-104910-8	~~48.77 [1.920]~~	~~50.80 [2.000]~~	~~18~~	~~19~~	~~1-103638-8~~
	46.23 [1.820]	48.26 [1.900]	17	18	1-103638-7
	43.69 [1.720]	45.72 [1.800]	16	17	1-103638-6
	41.15 [1.620]	43.18 [1.700]	15	16	1-103638-5
	38.61 [1.520]	40.64 [1.600]	14	15	1-103638-4
	36.07 [1.420]	38.10 [1.500]	13	14	1-103638-3
	33.53 [1.320]	35.56 [1.400]	12	13	1-103638-2
	30.99 [1.220]	33.02 [1.300]	11	12	1-103638-1
	28.45 [1.120]	30.48 [1.200]	10	11	1-103638-0
	25.91 [1.020]	27.94 [1.100]	9	10	103638-9
	23.37 [.920]	25.40 [1.000]	8	9	103638-8
	20.83 [.820]	22.86 [.900]	7	8	103638-7
	18.29 [.720]	20.32 [.800]	6	7	103638-6
	15.75 [.620]	17.78 [.700]	5	6	103638-5
	13.21 [.520]	15.24 [.600]	4	5	103638-4
	10.67 [.420]	12.70 [.500]	3	4	103638-3
	8.13 [.320]	10.16 [.400]	2	3	103638-2
	5.59 [.220]	7.62 [.300]	1	2	103638-1

THIS DRAWING IS A CONTROLLED DOCUMENT.

DIMENSIONS: mm [INCHES]

TOLERANCES UNLESS OTHERWISE SPECIFIED:
0 PLC ± –
1 PLC ± –
2 PLC ± 0.13[.005]
3 PLC ± –
4 PLC ± –
ANGLES ± –

MATERIAL: HOUSING: FLAME RETARDANT THERMOPLASTIC; COLOR: BLACK; CONTACTS: BRASS

FINISH: 1

DWN S. SHUEY 3-5-91
CHK J. GESFORD 3-5-91
APVD J. GESFORD 3-5-91

PRODUCT SPEC 108-25034
APPLICATION SPEC 114-25026
WEIGHT —

TE Connectivity

NAME: HDR ASSY, VERT, SINGLE ROW 2.54[.100] CL, 0.64[.025] SQ POST, WITH PLZN & LATCHING, AMPMODU MTE

SIZE	CAGE CODE	DRAWING NO	RESTRICTED TO
A1	00779	C-103638	—

CUSTOMER DRAWING | SCALE 4:1 | SHEET 1 OF 1 | REV R2