THIS DRAWING IS UNPUBLISHED. RELEASED FOR PUBLICATION .19 .
© COPYRIGHT 19 BY AMP INCORPORATED. ALL RIGHTS RESERVED.

LOC	DIST
DY	-

REVISIONS

P	LTR	DESCRIPTION	DATE	DWN	APVD
	E	REVISED FP00-0415-02	23DEC02	LWY	LSF

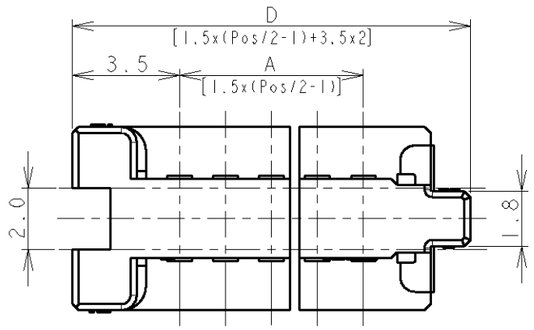

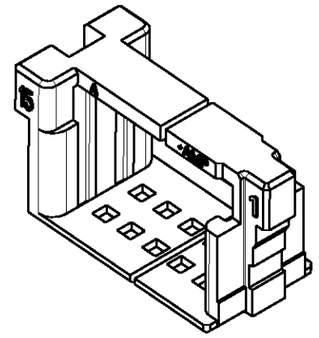

NOTES:
1. MATERIAL:66NYLON UL94V-0,COLOR:WHITE,BLUE
2. APPLICABLE CONNECTOR PART NUMBER:
X-353293-X(REC ASS'Y)
3. PROFILE DEVIATION AT LOCATION SHOWN ALLOWED UP TO 1.5 MAX

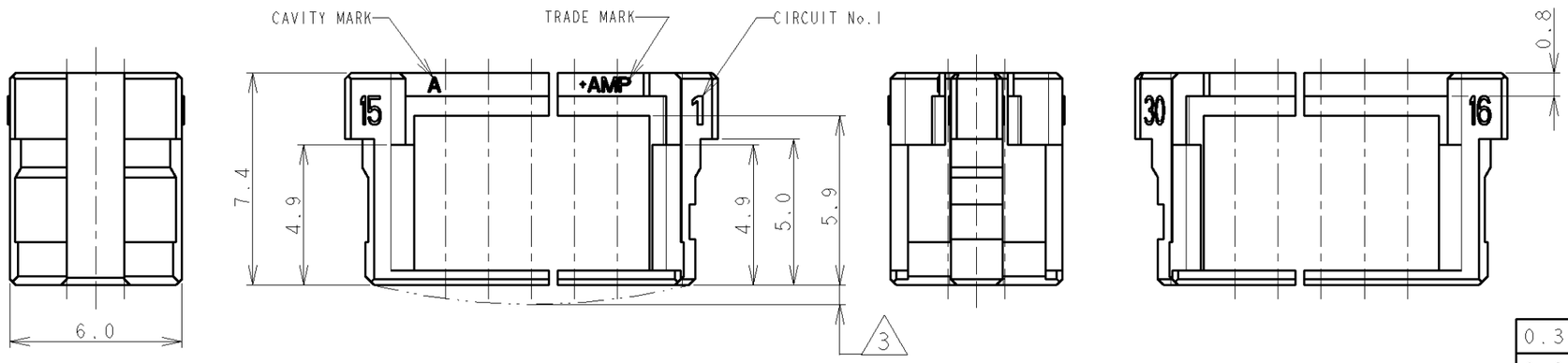

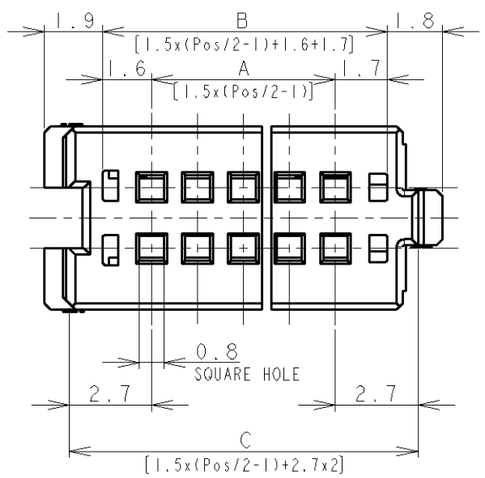

WEIGHT (g)	D	C	B	A	Pos	BLUE	WHITE
	DIMENSIONS					P/N	
0.30	35.5	33.9	31.8	28.5	40	9-353294-0	4-353294-0
0.29	34.0	32.4	30.3	27.0	38	8-353294-8	3-353294-8
0.28	32.5	30.9	28.8	25.5	36	8-353294-6	3-353294-6
0.27	31.0	29.4	27.3	24.0	34	8-353294-4	3-353294-4
0.26	29.5	27.9	25.8	22.5	32	8-353294-2	3-353294-2
0.25	28.0	26.4	24.3	21.0	30	8-353294-0	3-353294-0
0.24	26.5	24.9	22.8	19.5	28	7-353294-8	2-353294-8
0.23	25.0	23.4	21.3	18.0	26	7-353294-6	2-353294-6
0.22	23.5	21.9	19.8	16.5	24	7-353294-4	2-353294-4
0.21	22.0	20.4	18.3	15.0	22	7-353294-2	2-353294-2
0.20	20.5	18.9	16.8	13.5	20		

THIS DRAWING IS A CONTROLLED DOCUMENT FOR AMP INCORPORATED. IT IS SUBJECT TO CHANGE AND THE CONTROLLING ENGINEERING ORGANIZATION SHOULD BE CONTACTED FOR THE LATEST REVISION.

DIMENSIONS: mm

TOLERANCES UNLESS OTHERWISE SPECIFIED:
0 PLC ±-
1 PLC ±-
2 PLC ±-
3 PLC ±-
4 PLC ±-
ANGLES ±-

MATERIAL SEE NOTE 1
FINISH -

DWN T.FURUYA 12JUL96
CHK J.TANIGAWA 12JUL96
APVD SF LFONG
PRODUCT SPEC 108-5525
APPLICATION SPEC 114-5223
WEIGHT SEE TABLE

CUSTOMER DRAWING

AMP MANUFACTURING (SINGAPORE) PTE. LTD.

NAME
AMP Mini Common Terminated (CT) Connector 1.5mm PITCH
DOUBLE ROW HOLDER HOUSING

SIZE	CAGE CODE	DRAWING NO
A3	00779	C-353294

SCALE 5:1 SHEET 1 OF 1 REV E