PART NUMBER	ENGINEERING NO.	LENGTH
1300060529	103002A01F030	3' +1.75 - 0 [0.9M +44.5 - 0]
1300060534	103002A01F060	6' +2.19 - 0 [1.8M +55.6 - 0]
1300060542	103002A01F120	12' +3.50 - 0 [3.7M +88.9 - 0]
1300060549	103002A01F200	20' +6.50 - 0 [6.1M +165.1 - 0]

NOTES:
1. MATERIAL: SEE TABLE
2. FINISHES: SEE TABLE
3. CABLE ASSEMBLIES ARE BAGGED SEPERATELY IN POLY BAGS WITH BARCODE LABEL ATTACHED TO OUTSIDE OF BAG
4. WRAP LABEL IS MARKED WITH P/N, DATE CODE VOLTAGE & AMPERAGE
5. MATES WITH: MINI CHANGE, A-SIZE 3 POLE RECEPTACLE
6. ELECTRICAL SPECIFICATIONS:
   VOLTAGE RATING: 600V
   CURRENT RATING: 13 AMPS
7. ASSEMBLY IS RoHS COMPLIANT

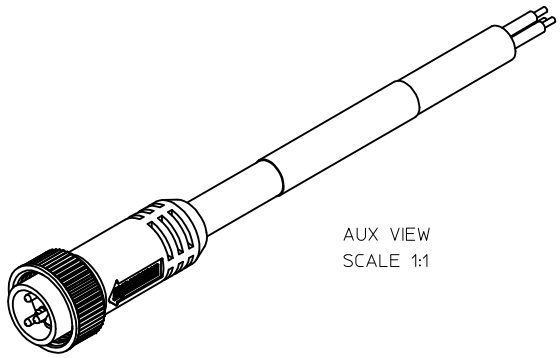

WIRING DIAGRAM

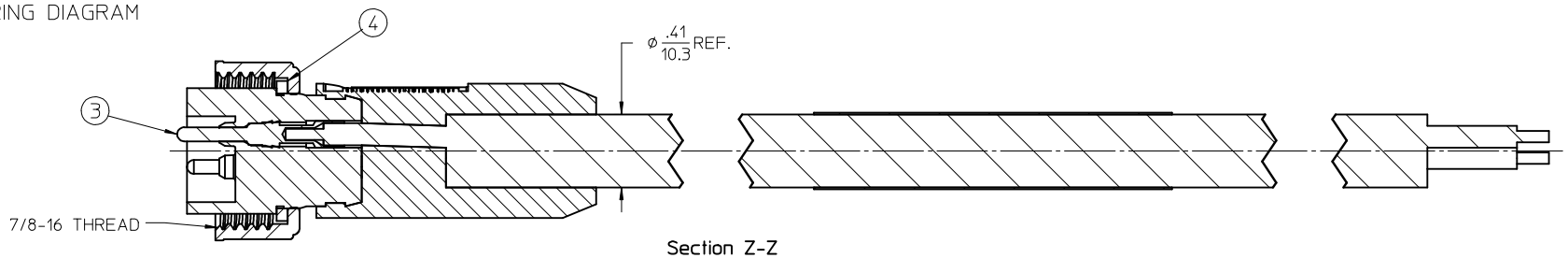

Section Z-Z
Scale 2:1

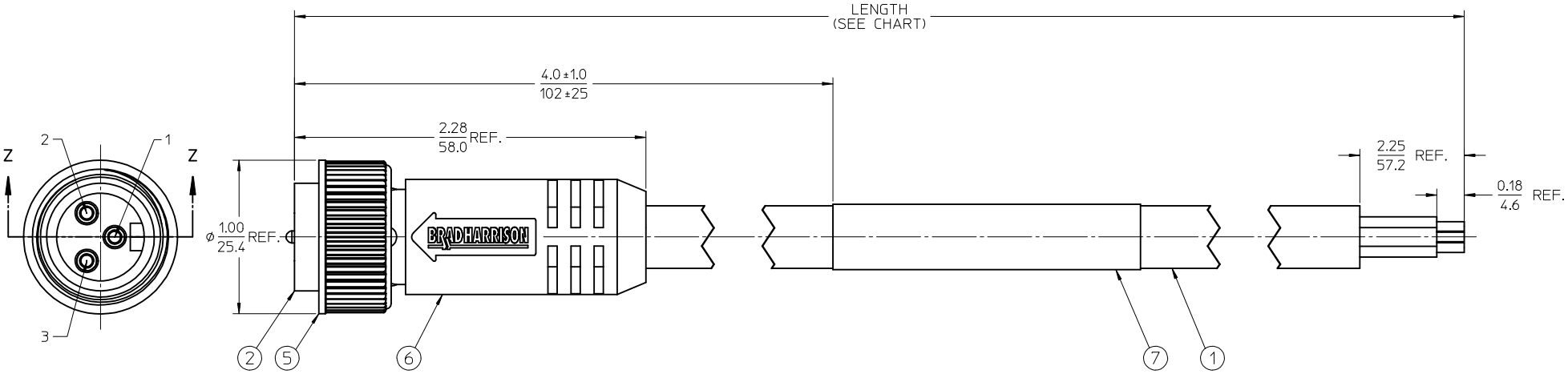

ITEM	QTY.	DESCRIPTION	MATERIAL	FINISH
7	1	LABEL	PLASTIC FILM	BLACK/YELLOW
6	1	OVERMOLD, STRAIGHT	PVC	YELLOW
5	1	COUPLING NUT, FEMALE	ZINC DIE CAST	BLACK
4	1	FRICTION RING	NYLON	WHITE
3	3	CONTACT PIN, 16 AWG	BRASS	GOLD PLATED
2	1	INSERT, MALE, 3 POLE	PVC	YELLOW
1	1	CABLE, STOOW/ST #16/3	PVC JACKET	GRAY

PURCHASING DRAWING
EC NO: WNA2009-0810
DRWN:LHARTMANN 2009/06/08
CHKD:RSTONE
APPR: JFMURPHY 2009/08/17
DESCRIPTION
A
REV

QUALITY SYMBOLS
▼=0
▽=0

GENERAL TOLERANCES (UNLESS SPECIFIED)

	mm	INCH
4 PLACES	± ---	± ---
3 PLACES	± ---	± .005
2 PLACES	± ---	± .010
1 PLACE	± ---	± .020
ANGULAR ±1/2°		

DRAFT WHERE APPLICABLE MUST REMAIN WITHIN DIMENSIONS

DIMENSION STYLE: IN/MM
SCALE: 1.5:1
DESIGN UNITS: INCH
THIRD ANGLE PROJECTION

DRAWN BY: LHARTMANN DATE: 2009/06/05
CHECKED BY: RSTONE DATE: 2009/06/08
APPROVED BY: JFMURPHY DATE: 2009/06/08

TITLE: MINI-CHANGE PORTABLE 3 POLE MALE STRAIGHT #16/3 YELLOW STOOW/ST

molex MOLEX INCORPORATED

MATERIAL NO.: SEE CHART
DOCUMENT NO.: SD-130006-003
SHEET NO.: 1 OF 1
SIZE: C

THIS DRAWING CONTAINS INFORMATION THAT IS PROPRIETARY TO MOLEX INCORPORATED AND SHOULD NOT BE USED WITHOUT WRITTEN PERMISSION