Alle Rechte vorbehalten/ *All rights reserved*

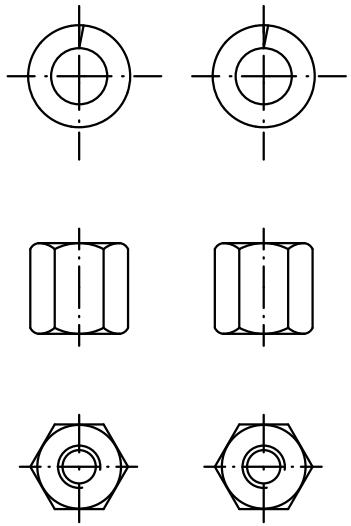

PAIR

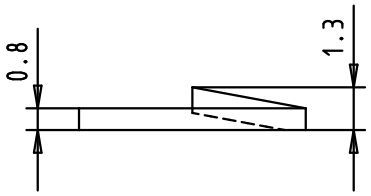

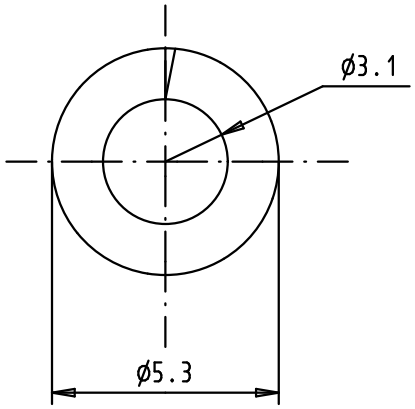

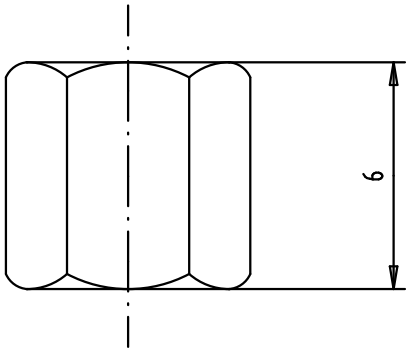

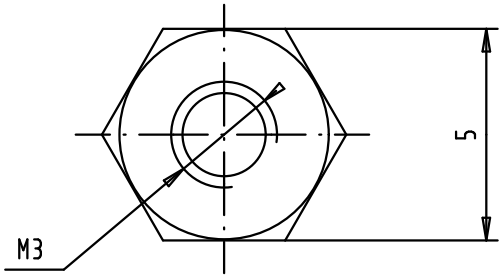

				Dat.	Name
			Detail.	22/11/02	S.H.
			Insp.	6/6/2011	JB
			Stand.		
EC03307	6/6/2011	SD			
31362	22/11/02	S.H.			
Mod.	Dat.	Name			

All Dim. in mm
Orig. Size DIN A 4

HARTING ELEKTRONIK
F-95972 Paris

Hex.Extender M3
include washer
"Pair"

TB 09 67 002 9120

Sub.

Maßstab/ *Scale*

Blatt/ *Page*