NO	DESCRIPTION	DATE
1	MODIFICATION CENTER CONTACT⑥ BACKGROUND FORMAT UPDATED	01.15.10'
2	DC-900 MHz —— DC-300 MHz	07.12.11'

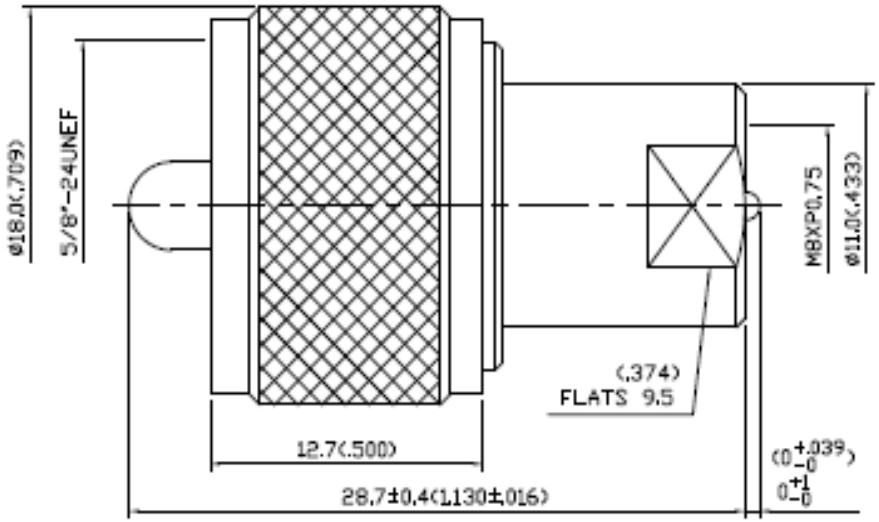

1.0 ELECTRICAL

1.1 FREQUENCY RANGE: DC-300 MHz 2
1.2 NOMINAL IMPEDANCE: 50 OHM

2.0 MATERIALS

2.1 BODIES: BRASS PER JIS-C3604
2.2 CENTER CONTACT: BRASS PER JIS-C3604
2.3 INSULATION: TEFLON PER ASTM D1457 AND ASTM D1710

3.0 FINISHES AND OTHERS

3.1 SEE BELOW TABLE FOR DETAILS.

4.0 ENVIRONMENTAL

4.1 OPERATING TEMPERATURE RANGE: -55° C TO +125° C

APPROVED by _____ DATE: _____

NO	DESCRIPTION	MATERIAL	Q'TY	FINISH
6	CENTER CONTACT	BRASS	1	GOLD
5	INSULATION II	TEFLON	1	NONE
4	BODY	BRASS	1	NICKEL 100μ" MIN.
3	WASHER	BRASS	1	NONE
2	INSULATION I	TEFLON	1	NONE
1	SHELL	BRASS	1	NICKEL 100μ" MIN.

DESCRIPTION	FME PLUG- UHF PLUG							
製圖	DRAWN: Yoko	TOLERANCE		品名 TITLE	23-13 \ROHS COMPLIANT (500)	T.G.N	日期 DATE 04.29.93'	版次 REV. A-2
檢圖	CHECK: Jacky	.X	±0.2	單位 UNIT	mm(in)	DWG.NO. 23-0045		
		.XX	±0.1					
核准	APPROVAL: Jenny	.XXX	±0.05	比例 SCALE	4:1			
		ANGLE	±5°					